SIEMENS

Product Manual

SENTRON

7KM Power Monitoring Device

PAC2200

Edition 09/2021

siemens.com/lowvoltage

SIEMENS

SENTRON

7KM Power Monitoring Device PAC2200

Equipment Manual

Introduction 1

Description 2

Installation 3

Connection 4

Operation 5

Commissioning 6

Service and maintenance 7

Technical specifications 8

Dimensional drawings 9

Appendix A

09/2021

L1V30415167B-04

Legal information

Warning notice system

This manual contains notices you have to observe in order to ensure your personal safety, as well as to prevent damage to property. The notices referring to your personal safety are highlighted in the manual by a safety alert symbol, notices referring only to property damage have no safety alert symbol. These notices shown below are graded according to the degree of danger.

⚠ DANGER
indicates that death or severe personal injury **will** result if proper precautions are not taken.

⚠ WARNING
indicates that death or severe personal injury **may** result if proper precautions are not taken.

⚠ CAUTION
indicates that minor personal injury can result if proper precautions are not taken.

NOTICE
indicates that property damage can result if proper precautions are not taken.

If more than one degree of danger is present, the warning notice representing the highest degree of danger will be used. A notice warning of injury to persons with a safety alert symbol may also include a warning relating to property damage.

Qualified Personnel

The product/system described in this documentation may be operated only by **personnel qualified** for the specific task in accordance with the relevant documentation, in particular its warning notices and safety instructions. Qualified personnel are those who, based on their training and experience, are capable of identifying risks and avoiding potential hazards when working with these products/systems.

Proper use of Siemens products

Note the following:

⚠ WARNING
Siemens products may only be used for the applications described in the catalog and in the relevant technical documentation. If products and components from other manufacturers are used, these must be recommended or approved by Siemens. Proper transport, storage, installation, assembly, commissioning, operation and maintenance are required to ensure that the products operate safely and without any problems. The permissible ambient conditions must be complied with. The information in the relevant documentation must be observed.

Trademarks

All names identified by ® are registered trademarks of Siemens AG. The remaining trademarks in this publication may be trademarks whose use by third parties for their own purposes could violate the rights of the owner.

Disclaimer of Liability

We have reviewed the contents of this publication to ensure consistency with the hardware and software described. Since variance cannot be precluded entirely, we cannot guarantee full consistency. However, the information in this publication is reviewed regularly and any necessary corrections are included in subsequent editions.

Siemens AG
Digital Industries
Postfach 48 48
90026 NÜRNBERG
GERMANY

Ⓟ 09/2021 Subject to change

Copyright © Siemens AG 2017.
All rights reserved

Table of contents

1 Introduction ... 7

1.1 Components of the product ... 7

1.2 Latest information ... 8

1.3 Security information ... 9

1.4 Open Source Software ... 10

1.5 Advanced training courses ... 11

1.6 Risk of manipulation ... 11

1 Description ... 13

2.1 Performance features ... 13

2.2 Measuring inputs ... 17

2.3 Averaging measured values ... 21
2.3.1 Acquisition of power demand ... 21
2.3.2 Energy counters ... 22
2.3.3 History of active energy consumption ... 23
2.3.4 Configurable universal counter ... 24

2.4 Digital inputs and outputs ... 24
2.4.1 Digital input ... 24
2.4.2 Digital output ... 25

2.5 Communication ... 27
2.5.1 Ethernet ... 27
2.5.2 RS485 ... 28
2.5.3 M-BUS ... 28
2.5.3.1 Three-phase connection (3P4W) ... 29
2.5.3.2 1-phase connection (1P2W) ... 35

1 Installation ... 39

3.1 Introduction ... 39

3.2 Installation steps ... 40

3.3 Removal ... 40

1 Connection ... 41

4.1 Safety notes ... 41

4.2 Connections ... 43

4.3 Connection examples ... 45

4.4 Connecting the communication cable ... 48
4.4.1 Ethernet communication cable ... 48
4.4.2 RS485 communication cable ... 48
4.4.3 M-Bus communication cable ... 50

4.4.4 Grounding of the Ethernet/RS485 cable ... 50
4.5 Gateway (slave) ... 52
1 Operation ... 53
5.1 Device interface ... 53
5.1.1 Displays and operator controls ... 53
5.1.2 SW button ... 54
5.1.3 Control keys ... 54
5.2 Menu-based navigation ... 55
5.2.1 Measured value level ... 55
5.2.2 Main menu level ... 55
5.2.3 Setting level ... 56
5.2.4 Editing level ... 56
5.3 Supporting software ... 57
5.3.1 Introduction ... 57
5.3.2 powermanager ... 57
5.3.3 SENTRON powerconfig ... 57
5.3.4 Web server ... 58
5.4 Protection against manipulation ... 59
5.4.1 Introduction ... 59
5.4.2 Password protection ... 59
5.4.3 Hardware write protection ... 60
5.4.4 IP filter (subnet firewall protection) ... 60
5.4.5 Modbus TCP port, configurable ... 60
5.4.6 Housing seal and sealing ... 61
1 Commissioning ... 63
6.1 Overview ... 63
6.2 Applying the measuring voltage ... 64
6.3 Parameterizing the device ... 64
6.3.1 Parameterizing with SENTRON powerconfig ... 64
6.3.2 Parameterization via the device menu ... 68
1 Service and maintenance ... 79
7.1 Cleaning ... 79
7.2 Calibration ... 79
7.3 Firmware updates ... 79
7.4 Troubleshooting guide ... 80
7.5 Warranty ... 81
1 Technical specifications ... 83
8.1 Technical specifications ... 83
8.2 Labeling ... 94
1 Dimensional drawings ... 95
9.1 Dimensional drawings ... 95

A Appendix 97

A.1 Modbus 97
A.1.1 Function codes 97
A.1.2 Modbus exception codes 98
A.1.3 Modbus measured variables with the function codes 0x03 and 0x04 99
A.1.4 Modbus-measured variables with function code "0x14" 104
A.1.5 Active energy history with Modbus function code 0x14 110
A.1.6 User-defined Modbus function code 0x64 117
A.1.7 Structure - Digital input status and digital output status with the function codes 0x03 and 0x04 120
A.1.8 Structure - Device diagnostics and device status with the function codes 0x03 and 0x04 121
A.1.9 Modbus status parameters with the function code 0x02 122
A.1.10 Modbus settings with the function codes 0x03, 0x04 and 0x10 122
A.1.11 Modbus communication parameters with the function codes 0x03, 0x04 and 0x10 125
A.1.12 Modbus device information with the function codes 0x03, 0x04 and 0x10 128
A.1.13 Modbus command parameters 129
A.1.14 Modbus standard device identification with the function code 0x2B 130

Index 131

Introduction 1

1.1 Components of the product

The package includes:

- PAC2200 measuring device
- PAC2200 operating instructions:
- CE Declaration of Conformity (only for MID devices)

Available accessories

- SENTRON powerconfig software (https://support.industry.siemens.com/cs/document/63452759/update-version-powerconfig-v3-7?dti=0&lc=en-WW)
- powermanager software (https://support.industry.siemens.com/cs/document/64850998/powermanager-v3-3-incl-hf1?dti=0&lc=en-WW)

1.2 Latest information

Up-to-the-minute information

You can find further assistance:

on the Internet:

Website (https://support.industry.siemens.com/my/ww/en/requests)

General safety notes

DANGER

Hazardous voltage.
Will cause death, serious personal injury, or equipment damage.

Turn off and lock out all power supplying this equipment before working on this device.

WARNING

Impairment of protection will result from improper use.
Can cause death, serious personal injury, or equipment damage.

The device may be used only for the applications described in the catalog and the associated technical documentation.

Note

These operating instructions do not purport to cover all details or variations in equipment, or to provide for every possible contingency in connection with installation, operation, or maintenance. Should additional information be desired, or should particular problems arise that are not discussed in enough detail in the operating instructions, please contact Technical Support (https://www.siemens.com/lowvoltage/technical-support) for the information you require.

Safety-related symbols on the device

	Symbol	Meaning
(1)		Risk of electric shock
(2)		Safety alert symbol
(3)		Electrical installation and maintenance by qualified personnel only

1.3 Security information

Siemens provides products and solutions with industrial security functions that support the secure operation of plants, systems, machines and networks.

In order to protect plants, systems, machines and networks against cyber threats, it is necessary to implement – and continuously maintain – a holistic, state-of-the-art industrial security concept. Siemens' products and solutions constitute one element of such a concept.

Customers are responsible for preventing unauthorized access to their plants, systems, machines and networks. Such systems, machines and components should only be connected to an enterprise network or the Internet if and to the extent such a connection is necessary and only when appropriate security measures (e.g. firewalls and/or network segmentation) are in place.

For additional information on industrial security measures that may be implemented, please visit (https://www.siemens.com/industrialsecurity).

Siemens' products and solutions undergo continuous development to make them more secure. Siemens strongly recommends that product updates are applied as soon as they are available and that the latest product versions are used. Use of product versions that are no longer supported, and failure to apply the latest updates may increase customer's exposure to cyber threats.

To keep up to date with all the latest product updates, subscribe to the Siemens Industrial Security RSS Feed at (https://www.siemens.com/industrialsecurity).

1.4 Open Source Software

This product, solution or service ("Product") contains third-party software components. These components are Open Source Software licensed under a license approved by the Open Source Initiative or similar licenses as determined by SIEMENS ("OSS") and/or commercial or freeware software components. With respect to the OSS components, the applicable OSS license conditions prevail over any other terms and conditions covering the Product. The OSS portions of this Product are provided royalty-free and can be used at no charge.

If SIEMENS has combined or linked certain components of the Product with/to OSS components licensed under the GNU LGPL version 2 or later as per the definition of the applicable license, and if use of the corresponding object file is not unrestricted ("LGPL Licensed Module", whereas the LGPL Licensed Module and the components that the LGPL Licensed Module is combined with or linked to is the "Combined Product"), the following additional rights apply, if the relevant LGPL license criteria are met: (i) you are entitled to modify the Combined Product for your own use, including but not limited to the right to modify the Combined Product to relink modified versions of the LGPL Licensed Module, and (ii) you may reverse-engineer the Combined Product, but only to debug your modifications. The modification right does not include the right to distribute such modifications and you shall maintain in confidence any information resulting from such reverse-engineering of a Combined Product.

Certain OSS licenses require SIEMENS to make source code available, for example, the GNU General Public License, the GNU Lesser General Public License and the Mozilla Public License. If such licenses are applicable and this Product is not shipped with the required source code, a copy of this source code can be obtained by anyone in receipt of this information during the period required by the applicable OSS licenses by contacting the following address:

Siemens AG
Smart Infrastructure
Electrical Products
Technical Support
Postfach 10 09 53
93009 Regensburg
Germany

You will find Technical Support under.

Keyword: Open Source Request (please specify Product name and version, if applicable)

SIEMENS may charge a handling fee of up to 5 EUR to fulfil the request.

Warranty regarding further use of the Open Source Software

SIEMENS' warranty obligations are set forth in your agreement with SIEMENS. SIEMENS does not provide any warranty or technical support for this Product or any OSS components contained in it if they are modified or used in any manner not specified by SIEMENS. The license conditions may contain disclaimers that apply between you and the respective licensor. For the avoidance of doubt, SIEMENS does not make any warranty commitment on behalf of or binding upon any third-party licensor. The Open Source Software used in the product and the license agreements concerning this software can be found in the Readme_OSS.

See also

Industry Online Support (https://support.industry.siemens.com/cs/us/en/ps)

www.opensource.org (http://www.opensource.org)

1.5 Advanced training courses

Find out about training courses on offer on the following link.

Training for Industry (https://www.siemens.com/sitrain-lowvoltage)

Here you can choose from:

- Web-based training courses (online, informative, free)
- Classroom training courses (course attendance, comprehensive, subject to fee)

You also have the possibility of compiling your own training portfolio via **Learning paths**.

1.6 Risk of manipulation

Note

Risk of manipulation

Several protective mechanisms can be activated in the device.

In order to reduce the risk of manipulation occurring on the device, it is recommended that the protective mechanisms available in the device are activated:

- Password protection to protect the device against unintentional adjustment of parameters.
- Hardware write protection, to effectively prevent changes to the device parameters without physical access to the device.
  If you want to use the device for billing purposes, please refer to the notes at the end of the chapter Parameterizing via the device menu.

See also

Parameterization via the device menu (Page 68)

Description

2

2.1 Performance features

The PAC2200 is a measuring device for measuring the basic electrical variables in low-voltage power distribution. All measured variables are shown on the display of the PAC2200. The device is capable of single-phase, two-phase or three-phase measurement and can be used in TN, TT and IT systems.

The PAC2200 measuring device is available in several versions:

- **5 A device:**

X / 1 A and x / 5 A current transformers can be used for current measuring.

- **65 A device:**

No current transformers are required for current measuring. The device is connected directly to the low-voltage network. Current of up to 65 A can be measured directly.

Depending on the device version, the PAC2200 measuring device has an integrated Ethernet, RS485 or M-BUS interface.

Thanks to its large measuring voltage range, the PAC2200 measuring device can be connected directly in any low-voltage system up to a voltage UL-L 480 V.

The power monitoring devices have a range of useful monitoring, diagnostics and service functions, a two-tariff active energy and reactive energy counter, and universal counter,

Measurement

- Measurement of all relevant electrical variables in an AC system
- Averaging of all measured values directly on the device in two stages, which are independent of each other and freely configurable (aggregation)
- Automatic line frequency detection for 50 Hz und 60 Hz networks (MID approval only for 50 Hz networks)

Counters and average power demand values

- A number of energy counters capture active energy, reactive energy, apparent energy for off-peak and on-peak, import and export.
- Calculation and storage of the average value for active power and reactive power from the last demand period to allow simple generation of load profiles using software. Programmable demand period from 1 to 60 mins.
- Daily energy counter for active energy for each day of the preceding two months.

- Monthly energy counter for active energy for each month of the preceding 2 years.
- Configurable universal counter for counting limit violations and status changes at the digital input or output, or for indicating the active energy or reactive energy of a connected pulse encoder.

Display and operator control

- LC display
- Four control keys with variable function assignment
- LED for Ethernet communication, active energy pulse indicator
- SENTRON powerconfig
- powermanager
- Web server (HTTP) (optional)

Interfaces

- Ethernet (optional)
- RS485 interface (optional)
- M-BUS (optional)
- Digital input
- Digital output

Memory

Adjusted device parameters are permanently stored in the device memory.

Time synchronization for Ethernet devices

When the SNTP server is set and activated, time synchronization takes place automatically immediately after a device reboot.

Security

- Hardware write protection (If you want to use the device for billing purposes, please refer to the notes at the end of this chapter.)
- Password protection
- Access protection IP filter
- Modbus TCP port, configurable
- HTTP port, configurable
- Dynamic host configuration protocol (DHCP) included
- Simple Network Time protocol (SNTP) included

- Attachment of lead seals possible
- Sealed enclosure

Using "Password protection" and "Hardware write protection", you can protect against write access to the device settings of the PAC2200.

The protection intervenes in case of the following actions:

- Modify parameters in device
- Reset device to factory settings
- Reset password
- Update firmware on device (function is only available on Non-MID devices)

The data can be read without any restrictions.

Note

Activate hardware write protection

When connecting the measuring device to a network, it is recommended that the hardware write protection is activated.

Tariffs

PAC2200 supports 2 tariffs for the integrated energy counter (high and low tariff). These tariffs are for information only and are not intended for billing purposes.

Control of tariff switching

Tariff switching can be controlled via the digital input or the communications interfaces. Time-related switching is only possible using a higher-level system.

Switching between tariffs to the start of the next demand period

Tariff switching only becomes effective after the end of the period.
The synchronization frame contains the length of the demand period in minutes. The synchronization command is ignored if the period length sent to the device with the synchronization frame is different to the length parameterized in the device.

MID-approved

MID-approved devices are included in the portfolio. These devices are suitable for billing the active energy.

The following actions cannot be carried out on MID-approved devices:

- FW update
- Resetting the energy values

- Parameterization of the voltage input
- Inversion of the direction of current flow

The current transformer ratios set have no effect on the secondary total energy value.
The energy counters may already display a counter value upon delivery as a result of factory device testing.

See also

Energy counters (Page 22)

2.2 Measuring inputs

Current measurement

NOTICE
AC current measurement only The device is not suitable for measuring DC current.

The 5 A device is designed for:

- **Measuring current of 5 A for connecting standard current transformers.** Each current measuring input can take a continuous load of 10 A. A momentary overcurrent of up to 100 A and a duration of 1 s is possible.

The current direction can be changed for each phase individually. It is not necessary to change the terminal connections of the current transformers in the event of connection errors (function not available for MID device).

The 65 A device is designed for:

- **Direct connection to the low-voltage network**.

Voltage measurement

NOTICE
AC voltage measurement only The device is not suitable for measuring DC voltage.

PAC2200 is designed for:

- **Direct measurement on the network**.
- **Networks with line voltages up to 230 V / 400 V**. The device is designed for connection to low-voltage networks with nominal line voltages of 400 / 230V (UL-L/UL-N).Volts In other words, it can be used for measuring voltages up to 277 V line conductor to neutral conductor and 480 V line conductor to line conductor.

Connection types

Two connection types have been provided. The device can be used in TN, TT and IT networks.

Table 2- 1 Available connection types

Short code	Connection type
3P4W (factory setting)	3 phases, 4 conductors, unbalanced load
1P2W	1 phase, 2 conductors, unbalanced load

The input circuit of the device must correspond to one of the connection types listed. Select the suitable connection type for the purpose.

Connection examples can be found in chapter Connection (Page 41)

NOTICE
The wrong system connection can damage the device. Before connecting the PAC2200, you must ensure that the local power supply conditions align with the specifications on the rating plate.

The short code of the connection type must be entered in the device settings at startup. You can find the instructions for parameterizing the connection type in chapter Commissioning (Page 63).

Display of the measured variables depending on the connection type

The table below shows which measured values can be represented depending on the connection type.

The availability of the measured variables depends on the type of readout.

Depending on the device version, several different readout types are available:

- Device display
- Modbus TCP
- Modbus RTU
- M-Bus
- Web server

Table 2- 2 Displaying the measured variables on the device display depending on the connection type

Connection type Measured variable	3P4W	1P2W	Web server
Voltage L_{1-N}	✓	✓	✓
Voltage L_{2-N}	✓	—	✓
Voltage L_{3-N}	✓	—	✓
Voltage L_{1-2}	✓	—	✓
Voltage L_{2-3}	✓	—	✓
Voltage L_{3-1}	✓	—	✓
Current L_1	✓	✓	✓
Current L_2	✓	—	✓
Current L_3	✓	—	✓
Apparent power L_1	✓	✓	✓
Apparent power L_2	✓	—	✓
Apparent power L_3	✓	—	✓
Current I_n (calculated)	✓	—	✓

Connection type Measured variable	3P4W	1P2W	Web server
Active power L_1	✓	✓	✓
Active power L_2	✓	—	✓
Active power L_3	✓	—	✓
Reactive power L_1	✓	✓	✓
Reactive power L_2	✓	—	✓
Reactive power L_3	✓	—	✓
Total apparent power	✓	✓	✓
Total active power	✓	✓	✓
Total reactive power	✓	✓	✓
Power factor L_1	✓	✓	✓
Power factor L_2	✓	—	✓
Power factor L_3	✓	—	✓
Total power factor	✓	✓	✓
Frequency	✓	✓	✓
Average voltage L - N	✓	—	—
Average voltage L - L	✓	—	—
Average current	✓	—	—
Binary outputs	✓	✓	—
Binary inputs	✓	✓	—
Tariff	✓	✓	—
Counter (configurable)	✓	✓	—
Active power import (load profile)	✓	✓	—
Active power export (load profile)	✓	✓	—
Reactive power import (load profile)	✓	✓	—
Reactive power export (load profile)	✓	✓	—
Max. active power (load profile)	✓	✓	—
Min. active power (load profile)	✓	✓	—
Max. reactive power (load profile)	✓	✓	—
Min. reactive power (load profile)	✓	✓	—
Total active energy import tariff 1	✓	✓	✓
Total active energy import tariff 2	✓	✓	✓
Total active energy export tariff 1	✓	✓	✓
Total active energy export tariff 2	✓	✓	✓
Total reactive energy import tariff 1	✓	✓	✓
Total reactive energy import tariff 2	✓	✓	✓
Total reactive energy export tariff 1	✓	✓	✓
Total reactive energy export tariff 2	✓	✓	✓
Total apparent energy tariff 1	✓	✓	✓
Total apparent energy tariff 2	✓	✓	✓
Current In (parameterizable)	✓	✓	✓
L1 active energy import tariff 1	✓	✓	✓
L1 active energy import tariff 2	✓	✓	✓
L1 active energy export tariff 1	✓	✓	✓
L1 active energy export tariff 2	✓	✓	✓

Connection type Measured variable	3P4W	1P2W	Web server
L1 reactive energy import tariff 1	✓	✓	✓
L1 reactive energy import tariff 2	✓	✓	✓
L1 reactive energy export tariff 1	✓	✓	✓
L1 reactive energy export tariff 2	✓	✓	✓
L1 apparent energy tariff 1	✓	✓	✓
L1 apparent energy tariff 2	✓	✓	✓
L2 active energy import tariff 1	✓	—	✓
L2 active energy import tariff 2	✓	—	✓
L2 active energy export tariff 1	✓	—	✓
L2 active energy export tariff 2	✓	—	✓
L2 reactive energy import tariff 1	✓	—	✓
L2 reactive energy import tariff 2	✓	—	✓
L2 reactive energy export tariff 1	✓	—	✓
L2 reactive energy export tariff 2	✓	—	✓
L2 apparent energy tariff 1	✓	—	✓
L2 apparent energy tariff 2	✓	—	✓
L3 active energy import tariff 1	✓	—	✓
L3 active energy import tariff 2	✓	—	✓
L3 active energy export tariff 1	✓	—	✓
L3 active energy export tariff 2	✓	—	✓
L3 reactive energy import tariff 1	✓	—	✓
L3 reactive energy import tariff 2	✓	—	✓
L3 reactive energy export tariff 1	✓	—	✓
L3 reactive energy export tariff 2	✓	—	✓
L3 apparent energy tariff 1	✓	—	✓
L3 apparent energy tariff 2	✓	—	✓
Secondary total active energy import (MID register) *)	✓	—	—
Secondary total active energy export (MID register)	✓	—	—

*) cannot be read out via M-Bus

2.3 Averaging measured values

Instantaneous values are averaged over defined time periods in order to generate measured value profiles. The average values can be read out and stored for this purpose. This reduces the communication load and the storage requirements on downstream servers.

The PAC2200 device has two average value generators, which can be parameterized independently.

The aggregation of the measured values reduces the bus load without risk of loosing information. Average values are calculated contiguously, based on the underlying values.

After expiry of the set time period, the values are updated each time.

- The default setting for average value 1 is a period of 10 seconds.
- The default setting for average value 2 is a period of 15 minutes.

The period length can be set to anything between 3 seconds and 1 year.

This function is only available if communication interfaces via Modbus TCP/RTU are used.

The list of available measured values can be found in chapter Modbus-measured variables with function code "0x14" (Page 104).

2.3.1 Acquisition of power demand

Values that can be read out

The PAC2200 measuring device supplies the power demand of the last completed measuring period:

- Mean values for active and reactive power, separately for import and export.
- Minimum and maximum active power and reactive power within the last measuring period.
- Length of the measuring period in seconds. The period may be shorter for reasons of external synchronization.
- Time in seconds since the last synchronization or since completion of the last period.

Example: Period length and length of the measuring period:

Period length: 15 minutes; time of day: 13:03; time in seconds: 180 s.

The following can be calculated from this: The last measuring period ended at 13:00. The active measuring period will end at 13:15 or in 12 minutes.

In addition to this data, the entry includes the following further information (see Modbus map register 545ff):

- Time stamp at the end of the last completed demand period (UTC)
- Unique ID
- Active energy and reactive energy for import and export of the last period
- Real length of period (measurement duration)
- Total amount of active energy for import and export, separated according to tariff T1 and T2
- Total amount of reactive energy for import and export, separated according to tariff T1 and T2
- Total import of amount of active energy for tariff T1 and T2
- Total import of amount of reactive energy for tariff T1 and T2
- Status information about the values from this demand period

Note

The power demand of the last measuring period can only be retrieved during the current measuring period.

The power demand can only be read out via the interface (it is not shown on the display).

Adjustable parameters

- Period length in minutes: Can be set for 1 to 60 minutes (1 / 2 / 3 / 4 / 5 / 6 / 10 / 12 / 15 / 20 / 30 / 60 minutes), default value 15 minutes.
- Synchronization via bus, digital input or internal time

2.3.2 Energy counters

Available energy counters of the PAC2200 measuring device:

			Tariff 1	**Tariff 2**	**Total (T1 + T2)**
Active energy kWh	**Import**	Total	X	X	X
		L1	X	X	
		L2	X	X	
		L3	X	X	
		Secondary value			X (MID)
	Export	Total	X	X	X
		L1	X	X	
		L2	X	X	
		L3	X	X	
		Secondary value			X (MID)

Reactive energy kvarh	**Import**	Total	X	X	X
		L1	X	X	
		L2	X	X	
		L3	X	X	
		Secondary value			X
	Export	Total	X	X	X
		L1	X	X	
		L2	X	X	
		L3	X	X	
		Secondary value			X
Apparent energy kVAh		Total	X	X	X
		L1	X	X	
		L2	X	X	
		L3	X	X	
		Secondary value			X

Secondary values: Non-resettable energy counters. Transformer ratio is not taken into account in the calculation.

MID: MID registers are marked in the menu with MID mark. Marked registers are suitable for billing purposes.

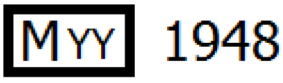

YY Indicates the year the MID marking was affixed

2.3.3 History of active energy consumption

Based on selected recordings of energy consumption over time, users can perform a targeted analysis of their energy consumption for the purpose of optimizing their energy usage. The power monitoring devices have a daily energy counter and a monthly energy counter.

- The daily energy counter records the active energy in a ring buffer with a depth of 221 days.
- The monthly energy counter records the active energy in a ring buffer with a depth of 25 months.
- The annual energy counter records the active energy in a ring buffer with a depth of 7 years.

This function is available only in conjunction with communication interfaces. You can find the list of available measuring values in chapters Active energy history with Modbus function code 0x14 (Page 110) and User-defined Modbus function code 0x64 (Page 117).

2.3.4 Configurable universal counter

The devices provide one configurable counter. The following values can be counted:

- Pulse counting via the digital input for kWh/kvarh
- Status changes at the digital input (rising edge only)
- Status changes at the digital output (rising edge only)

2.4 Digital inputs and outputs

The PAC2200 has the following inputs/outputs:

- **1 digital input**
- **1 digital output**

2.4.1 Digital input

The following functions can be assigned to the digital input:

- Status monitoring: Capturing statuses of connected signal encoders
- Tariff switch for two-tariff counters.
- Synchronization of the measuring period by means of the synchronization pulse of a system control center or other device.
- Input for energy pulses (S0 interface)
- Control of display backlighting

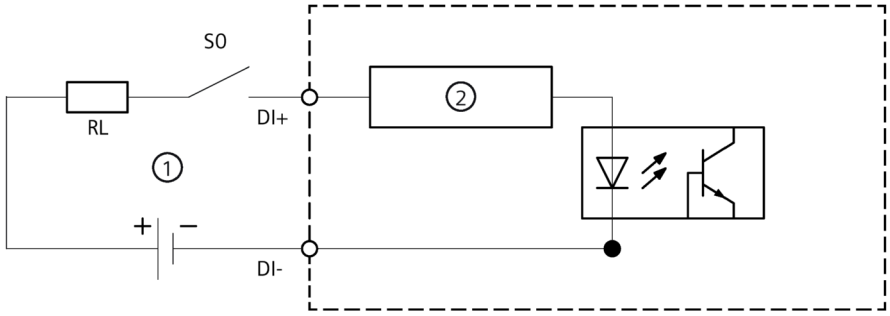

(1) External power supply, max. 30 VDC, typically 24 VDC
(2) Input electronics

Figure 2-1 Block diagram: Digital inputs

2.4.2 Digital output

The following functions can be assigned to the digital output:

- Not used

  Digital output is deactivated.

- Device is ready for operation.

  The digital output is ON.

- Remote control

  The digital input is remotely controlled via Modbus. Remote control via M-BUS is not supported.

- Direction of rotation

  The digital output is switched on by a counter-clockwise rotating electrical field and remains active while the direction of rotation of the field remains unchanged.

- Energy pulse

  The digital output outputs the parameterized number of pulses per energy unit (e.g. kWh). The specified energy counter is evaluated here.

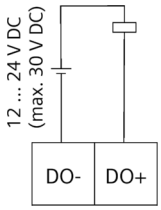

Figure 2-2 Block diagram: Digital outputs

Note

The digital output can be connected as P or N switching.

Wiring

The digital output is passive and implemented exclusively as a switch.

Implementation of the pulse function corresponds to the IEC 62053-31 standard.

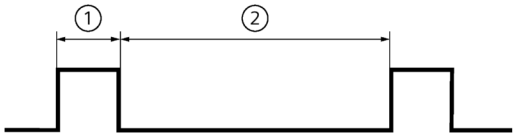

(1) Pulse length
(2) Turn-off time

Figure 2-3 Pulse length and turn-off time

- Pulse length:
  Time for which the signal at the digital output is "high". The minimum pulse length is 30 ms and the maximum 500 ms.
- Turn-off time:
  Time for which the signal at the digital output is "low". The turn-off time depends on the measured energy, for example, and can be days or months.
- Minimum turn-off time:
  The minimum turn-off time corresponds to the programmed pulse length. 30 ms is the absolute minimum.

2.5 Communication

Depending on the device version, the devices may be fitted with the following communications interfaces:

- **Ethernet**
- **RS 485**
- **M-BUS**

The selection of the measured variables available for selection can vary according to the communication mode selected.

2.5.1 Ethernet

Permits communication via the following protocols:

- **Modbus TCP**

  The device can be configured via Modbus TCP

- **Web server (HTTP)**

  Protocol can be used to read out the measured values via web browser.

- **SNTP**

  The SNTP (Simple Network Time Protocol) is used to automatically synchronize the internal clock with a time server within the network.

  Three function modes are available:

  – No synchronization.

  – Date/time synchronization via device request

    The IP address of an NTP server must be configured. With this, the PAC2200 automatically requests the current time from the server and resets its internal clock, if necessary.

  – Date/time synchronization via SNTP server broadcast

    The PAC2200 receives broadcast time frames, which are sent from an NTP server. This is practical if the internal clocks of several devices in the same network need to remain synchronized. If the IP address of the NTP server has been configured, the PAC2200 only responds to these telegrams. Furthermore, it can send a request to the server, if necessary.

- **DHCP**

  Stands for "Dynamic Host Configuration Protocol". Protocol for obtaining network settings from a DHCP server. Network settings are assigned automatically.

2.5.2 RS485

Enables communication via MODBUS RTU protocol. This interface features simple topology and high immunity against EMC interference.

The data is transmitted differentially via two wires A and B. The third wire "COM" serves as the common ground potential.

Grounding of the cable shield:

The serial Modbus data cable should be shielded. The shield should be connected to protective ground at one end of the cable at least.

Grounding of the COM line:

Many masters do not have a common terminal. If this is the case, then RS485 common should reference the same functional ground as the master (at a single point). If the master has a common terminal, then the common is connected to it, and it is not connected to functional ground.

Note

RS485 termination is recommended.

In order to avoid reflection on the bus cable, we recommend fitting a 120 ohm terminating resistor at the beginning and end of the bus cable.

2.5.3 M-BUS

M-BUS is the abbreviation for Meter-Bus according to EN13757. The M-BUS is used as a fieldbus for the acquisition of consumption data. The data is serially transmitted over a reverse-polarity protected two-wire line.

PAC2200 data can be read out with an M-BUS master. The PAC2200 is then implemented as an M-BUS slave.

To read out measurement data stored on the device, the slave address must be known.

The user can give a primary address to the device manually, or use the secondary address of the device. The secondary address is automatically created from the serial number of the device and must therefore not be set explicitly. Furthermore, the interface of the PAC2200 must be set to the baud rate used in your M-BUS system. Additionally the user can choose between two different DIF / VIF codes ("mapping"). In "Mapping 1" the measured values are coded in more detail with DIF / VIF with the result that all the data records have different coding.

Different measurement data is available, depending on the connection type, 3P4W or 1P2W.

The connection type and the parameter setting in the M-BUS communications menu on the device display define the data record structure or contents of the RSP_UD2 long datagram.

At the M-BUS interface the setting can be determined by means of the version number in the header of the RSP_UD2 response datagram of an REQ_UD2 request (see M-BUS specification)

Header	Structure of RSP_UD2 datagram		
Version 30	3-phase connection 3P4W	69 data records on 3 pages	Mapping 0
Version 31	1-phase connection 1P2W	19 data records on 1 page	Mapping 0
Version 32	3-phase connection 3P4W	69 data records on 3 pages	Mapping 1
Version 33	1-phase connection 1P2W	19 data records on 1 page	Mapping 1

The factory setting when delivered is connection type "3P4W" with "Mapping 1".

If this setting is not changed the device addresses the M-BUS interface with version 32. The device then supplies 69 data records on 4 pages (in 4 datagrams).

2.5.3.1 Three-phase connection (3P4W)

The measurement data is presented on three pages (Mapping 0) and on four pages (Mapping 1). Multipage-capable masters can read out all three or four pages.

As an example, the coding of the data record with ID 13 (connection type 3P4W, Mapping 1, i.e. version 32) is more accurately explained in the RSP_UD2 response datagram (see also M-Bus specification):

Measured variable ID 13: **L2 active energy export tariff 2**

BYTE No.	Coding	Description
Byte 1	0x86	DIF value format INT48 -> Integer 6 bytes length
Byte 2	0x20	DIFE tariff 2
Byte 3	0x83	VIF active energy / unit Wh
Byte 4	0xBC	VIFE export
Bytes 5-6	0xFC 0x02	VIFE phase L2
Bytes 7-12	XX XX XX XX XX XX	Integer value of measured variable

All measurement data that can be read out via the M-Bus are listed in the following table.

ID	Measured variable	Length (bits)	Format	Unit
1	Secondary total active energy import (MID register)	48	INT48	Wh
2	Total active energy import tariff 1	48	INT48	Wh
3	Total active energy import tariff 2	48	INT48	Wh
4	Total active energy export tariff 1	48	INT48	Wh
5	Total active energy export tariff 2	48	INT48	Wh
6	L1 active energy import tariff 1	48	INT48	Wh
7	L1 active energy import tariff 2	48	INT48	Wh
8	L1 active energy export tariff 1	48	INT48	Wh
9	L1 active energy export tariff 2	48	INT48	Wh
10	L2 active energy import tariff 1	48	INT48	Wh
11	L2 active energy import tariff 2	48	INT48	Wh
12	L2 active energy export tariff 1	48	INT48	Wh

ID	Measured variable	Length (bits)	Format	Unit
13	L2 active energy export tariff 2	48	INT48	Wh
14	L3 active energy import tariff 1	48	INT48	Wh
15	L3 active energy import tariff 2	48	INT48	Wh
16	L3 active energy export tariff 1	48	INT48	Wh
17	L3 active energy export tariff 2	48	INT48	Wh
18	Total active power	32	FLOAT32	W
19	Active power L1	32	FLOAT32	W
20	Active power L2	32	FLOAT32	W
21	Active power L3	32	FLOAT32	W
22	Voltage L1-N	32	FLOAT32	V
23	Voltage L2-N	32	FLOAT32	V
24	Voltage L3-N	32	FLOAT32	V
25	Voltage L1-L2	32	FLOAT32	V
26	Voltage L2-L3	32	FLOAT32	V
27	Voltage L3-L1	32	FLOAT32	V
28	Current L1	32	FLOAT32	A
29	Current L2	32	FLOAT32	A
30	Current L3	32	FLOAT32	A
31	Total reactive energy import tariff 1	48	INT48	kvarh
32	Total reactive energy import tariff 2	48	INT48	kvarh
33	Total reactive energy export tariff 1	48	INT48	kvarh
34	Total reactive energy export tariff 2	48	INT48	kvarh
35	L1 reactive energy import tariff 1	48	INT48	kvarh
36	L1 reactive energy import tariff 2	48	INT48	kvarh
37	L1 reactive energy export tariff 1	48	INT48	kvarh
38	L1 reactive energy export tariff 2	48	INT48	kvarh
39	L2 reactive energy import tariff 1	48	INT48	kvarh
40	L2 reactive energy import tariff 2	48	INT48	kvarh
41	L2 reactive energy export tariff 1	48	INT48	kvarh
42	L2 reactive energy export tariff 2	48	INT48	kvarh
43	L3 reactive energy import tariff 1	48	INT48	kvarh
44	L3 reactive energy import tariff 2	48	INT48	kvarh
45	L3 reactive energy export tariff 1	48	INT48	kvarh
46	L3 reactive energy export tariff 2	48	INT48	kvarh
47	Total reactive power (VAR1)	32	FLOAT32	kvar
48	Reactive power L1 (VAR1)	32	FLOAT32	kvar
49	Reactive power L2 (VAR1)	32	FLOAT32	kvar
50	Reactive power L3 (VAR1)	32	FLOAT32	kvar
51	Total power factor	32	FLOAT32	
52	Power factor L1	32	FLOAT32	
53	Power factor L2	32	FLOAT32	
54	Power factor L3	32	FLOAT32	
55	Frequency	32	FLOAT32	Hz
56	Tariff	8	INT8	
57	Total apparent energy tariff 1	48	INT48	kVAh

ID	Measured variable	Length (bits)	Format	Unit
58	Total apparent energy tariff 2	48	INT48	kVAh
59	L1 apparent energy tariff 1	48	INT48	kVAh
60	L1 apparent energy tariff 2	48	INT48	kVAh
61	L2 apparent energy tariff 1	48	INT48	kVAh
62	L2 apparent energy tariff 2	48	INT48	kVAh
63	L3 apparent energy tariff 1	48	INT48	kVAh
64	L3 apparent energy tariff 2	48	INT48	kVAh
65	Total apparent power	32	FLOAT32	kVA
66	Apparent power L1	32	FLOAT32	kVA
67	Apparent power L2	32	FLOAT32	kVA
68	Apparent power L3	32	FLOAT32	kVA
69	Date/time	32	time	

ID	Measured variable	Page	Version 32 Mapping 1 DIF / DIFE (default)	Version 32 Mapping 1 VIF / VIFE (default)
1	Secondary total active energy import (MID register)	1	0x06	0x03
2	Total active energy import tariff 1	1	0x86 0x10	0x03
3	Total active energy import tariff 2	1	0x86 0x20	0x03
4	Total active energy export tariff 1	1	0x86 0x10	0x83 0x3C
5	Total active energy export tariff 2	1	0x86 0x20	0x83 0x3C
6	L1 active energy import tariff 1	1	0x86 0x10	0x83 0xFC 0x01
7	L1 active energy import tariff 2	1	0x86 0x20	0x83 0xFC 0x01
8	L1 active energy export tariff 1	1	0x86 0x10	0x83 0xBC 0xFC 0x01
9	L1 active energy export tariff 2	1	0x86 0x20	0x83 0xBC 0xFC 0x01
10	L2 active energy import tariff 1	1	0x86 0x10	0x83 0xFC 0x02
11	L2 active energy import tariff 2	1	0x86 0x20	0x83 0xFC 0x02
12	L2 active energy export tariff 1	1	0x86 0x10	0x83 0xBC 0xFC 0x02
13	L2 active energy export tariff 2	1	0x86 0x20	0x83 0xBC 0xFC 0x02
14	L3 active energy import tariff 1	1	0x86 0x10	0x83 0xFC 0x03
15	L3 active energy import tariff 2	1	0x86 0x20	0x83 0xFC 0x03
16	L3 active energy export tariff 1	1	0x86 0x10	0x83 0xBC 0xFC 0x03
17	L3 active energy export tariff 2	1	0x86 0x20	0x83 0xBC 0xFC 0x03
18	Total active power	1	0x05	0x2B
19	Active power L1	1	0x05	0xAB 0xFC 0x01
20	Active power L2	1	0x05	0xAB 0xFC 0x02
21	Active power L3	1	0x05	0xAB 0xFC 0x03
22	Voltage L1-N	2	0x05	0xFD 0xC9 0xFC 0x01
23	Voltage L2-N	2	0x05	0xFD 0xC9 0xFC 0x02
24	Voltage L3-N	2	0x05	0xFD 0xC9 0xFC 0x03
25	Voltage L1-L2	2	0x05	0xFD 0xC9 0xFC 0x05

ID	Measured variable	Page	Version 32 Mapping 1 DIF / DIFE (default)	Version 32 Mapping 1 VIF / VIFE (default)
26	Voltage L2-L3	2	0x05	0xFD 0xC9 0xFC 0x06
27	Voltage L3-L1	2	0x05	0xFD 0xC9 0xFC 0x07
28	Current L1	2	0x05	0xFD 0xDC 0xFC 0x01
29	Current L2	2	0x05	0xFD 0xDC 0xFC 0x02
30	Current L3	2	0x05	0xFD 0xDC 0xFC 0x03
31	Total reactive energy import tariff 1	3	0x86 0x10	0xFB 0x02
32	Total reactive energy import tariff 2	3	0x86 0x20	0xFB 0x02
33	Total reactive energy export tariff 1	3	0x86 0x10	0xFB 0x82 0x3C
34	Total reactive energy export tariff 2	3	0x86 0x20	0xFB 0x82 0x3C
35	L1 reactive energy import tariff 1	3	0x86 0x10	0xFB 0x82 0xFC 0x01
36	L1 reactive energy import tariff 2	3	0x86 0x20	0xFB 0x82 0xFC 0x01
37	L1 reactive energy export tariff 1	3	0x86 0x10	0xFB 0x82 0xBC 0xFC 0x01
38	L1 reactive energy export tariff 2	3	0x86 0x20	0xFB 0x82 0xBC 0xFC 0x01
39	L2 reactive energy import tariff 1	3	0x86 0x10	0xFB 0x82 0xFC 0x02
40	L2 reactive energy import tariff 2	3	0x86 0x20	0xFB 0x82 0xFC 0x02
41	L2 reactive energy export tariff 1	3	0x86 0x10	0xFB 0x82 0xBC 0xFC 0x02
42	L2 reactive energy export tariff 2	3	0x86 0x20	0xFB 0x82 0xBC 0xFC 0x02
43	L3 reactive energy import tariff 1	3	0x86 0x10	0xFB 0x82 0xFC 0x03
44	L3 reactive energy import tariff 2	3	0x86 0x20	0xFB 0x82 0xFC 0x03
45	L3 reactive energy export tariff 1	3	0x86 0x10	0xFB 0x82 0xBC 0xFC 0x03
46	L3 reactive energy export tariff 2	3	0x86 0x20	0xFB 0x82 0xBC 0xFC 0x03
47	Total reactive power (VAR1)	3	0x05	0xFB 0x17
48	Reactive power L1 (VAR1)	3	0x05	0xFB 0x97 0xFC 0x01
49	Reactive power L2 (VAR1)	3	0x05	0xFB 0x97 0xFC 0x02
50	Reactive power L3 (VAR1)	3	0x05	0xFB 0x97 0xFC 0x03
51	Total power factor	4	0x05	0xFD 0x67
52	Power factor L1	4	0x05	0xFD 0xE7 0xFC 0x01
53	Power factor L2	4	0x05	0xFD 0xE7 0xFC 0x02
54	Power factor L3	4	0x05	0xFD 0xE7 0xFC 0x03
55	Frequency	4	0x05	0xFB 0x2F
56	Tariff	4	0x01	0xFD 0x67
57	Total apparent energy tariff 1	4	0x86 0x10	0xFB 0x04 0x
58	Total apparent energy tariff 2	4	0x86 0x20	0xFB 0x04
59	L1 apparent energy tariff 1	4	0x86 0x10	0xFB 0x84 0xFC 0x01
60	L1 apparent energy tariff 2	4	0x86 0x20	0xFB 0x84 0xFC 0x01
61	L2 apparent energy tariff 1	4	0x86 0x10	0xFB 0x84 0xFC 0x02
62	L2 apparent energy tariff 2	4	0x86 0x20	0xFB 0x84 0xFC 0x02
63	L3 apparent energy tariff 1	4	0x86 0x10	0xFB 0x84 0xFC 0x03

ID	Measured variable	Page	Version 32 Mapping 1 DIF / DIFE (default)	Version 32 Mapping 1 VIF / VIFE (default)
64	L3 apparent energy tariff 2	4	0x86 0x20	0xFB 0x84 0xFC 0x03
65	Total apparent power	4	0x05	0xFB 0x57
66	Apparent power L1	4	0x05	0xFB 0xD7 0xFC 0x01
67	Apparent power L2	4	0x05	0xFB 0xD7 0xFC 0x02

DIF / VIF coding for version 32 (3P4W, Mapping 1)

ID	Measured variable	Page	Version 30 Mapping 0 DIF/DIFE	Version 30 Mapping 0 VIF/VIFE
1	Secondary total active energy import (MID register)	1	0x06	0x03
2	Total active energy import tariff 1	1	0x86 0x10	0x03
3	Total active energy import tariff 2	1	0x86 0x20	0x03
4	Total active energy export tariff 1	1	0x86 0x10	0x03
5	Total active energy export tariff 2	1	0x86 0x20	0x03
6	L1 active energy import tariff 1	1	0x86 0x10	0x03
7	L1 active energy import tariff 2	1	0x86 0x20	0x03
8	L1 active energy export tariff 1	1	0x86 0x10	0x03
9	L1 active energy export tariff 2	1	0x86 0x20	0x03
10	L2 active energy import tariff 1	1	0x86 0x10	0x03
11	L2 active energy import tariff 2	1	0x86 0x20	0x03
12	L2 active energy export tariff 1	1	0x86 0x10	0x03
13	L2 active energy export tariff 2	1	0x86 0x20	0x03
14	L3 active energy import tariff 1	1	0x86 0x10	0x03
15	L3 active energy import tariff 2	1	0x86 0x20	0x03
16	L3 active energy export tariff 1	1	0x86 0x10	0x03
17	L3 active energy export tariff 2	1	0x86 0x20	0x03
18	Total active power	1	0x05	0x2B
19	Active power L1	1	0x05	0x2B
20	Active power L2	1	0x05	0x2B
21	Active power L3	1	0x05	0x2B
22	Voltage L1-N	1	0x05	0xFD 0x49
23	Voltage L2-N	1	0x05	0xFD 0x49
24	Voltage L3-N	1	0x05	0xFD 0x49
25	Voltage L1-L2	1	0x05	0xFD 0x49
26	Voltage L2-L3	1	0x05	0xFD 0x49
27	Voltage L3-L1	1	0x05	0xFD 0x49
28	Current L1	1	0x05	0xFD 0x5C
29	Current L2	1	0x05	0xFD 0x5C
30	Current L3	1	0x05	0xFD 0x5C

ID	Measured variable	Page	Version 30 Mapping 0 DIF/DIFE	Version 30 Mapping 0 VIF/VIFE
31	Total reactive energy import tariff 1	2	0x86 0x10	0xFB 0x02
32	Total reactive energy import tariff 2	2	0x86 0x20	0xFB 0x02
33	Total reactive energy export tariff 1	2	0x86 0x10	0xFB 0x02
34	Total reactive energy export tariff 2	2	0x86 0x20	0xFB 0x02
35	L1 reactive energy import tariff 1	2	0x86 0x10	0xFB 0x02
36	L1 reactive energy import tariff 2	2	0x86 0x20	0xFB 0x02
37	L1 reactive energy export tariff 1	2	0x86 0x10	0xFB 0x02
38	L1 reactive energy export tariff 2	2	0x86 0x20	0xFB 0x02
39	L2 reactive energy import tariff 1	2	0x86 0x10	0xFB 0x02
40	L2 reactive energy import tariff 2	2	0x86 0x20	0xFB 0x02
41	L2 reactive energy export tariff 1	2	0x86 0x10	0xFB 0x02
42	L2 reactive energy export tariff 2	2	0x86 0x20	0xFB 0x02
43	L3 reactive energy import tariff 1	2	0x86 0x10	0xFB 0x02
44	L3 reactive energy import tariff 2	2	0x86 0x20	0xFB 0x02
45	L3 reactive energy export tariff 1	2	0x86 0x10	0xFB 0x02
46	L3 reactive energy export tariff 2	2	0x86 0x20	0xFB 0x02
47	Total reactive power (VAR1)	2	0x05	0xFB 0x17
48	Reactive power L1 (VAR1)	2	0x05	0xFB 0x17
51	Total power factor	2	0x05	0xFD 0x67
52	Power factor L1	2	0x05	0xFD 0x67
53	Power factor L2	2	0x05	0xFD 0x67
54	Power factor L3	2	0x05	0xFD 0x67
55	Frequency	2	0x05	0xFB 0x2F
56	Tariff	2	0x01	0xFD 0x67
57	Total apparent energy tariff 1	3	0x86 0x10	0xFB 0x04
58	Total apparent energy tariff 2	3	0x86 0x20	0xFB 0x04
59	L1 apparent energy tariff 1	3	0x86 0x10	0xFB 0x04
60	L1 apparent energy tariff 2	3	0x86 0x20	0xFB 0x04
61	L2 apparent energy tariff 1	3	0x86 0x10	0xFB 0x04
62	L2 apparent energy tariff 2	3	0x86 0x20	0xFB 0x04
63	L3 apparent energy tariff 1	3	0x86 0x10	0xFB 0x04
64	L3 apparent energy tariff 2	3	0x86 0x20	0xFB 0x04
65	Total apparent power	3	0x05	0xFB 0x37
66	Apparent power L1	3	0x05	0xFB 0x37
67	Apparent power L2	3	0x05	0xFB 0x37
68	Apparent power L3	3	0x05	0xFB 0x37
69	Date/time	3	0x04	0x6D

DIF / VIF coding for version 30 (3P4W, Mapping 0)

2.5.3.2 1-phase connection (1P2W)

The measurement data is presented on one page.

All measurement data that can be read out via the M-BUS are listed in the following table.

ID	Measured variable	Length (bits)	Format	Unit
1	Total active energy import tariff 1	48	INT48	Wh
2	Total active energy import tariff 2	48	INT48	Wh
3	Total active energy export tariff 1	48	INT48	Wh
4	Total active energy export tariff 2	48	INT48	Wh
5	Active power L1	32	FLOAT32	W
6	Voltage L1-N	32	FLOAT32	V
7	Current L1	32	FLOAT32	A
8	Total reactive energy import tariff 1	48	INT48	kvarh
9	Total reactive energy import tariff 2	48	INT48	kvarh
10	Total reactive energy export tariff 1	48	INT48	kvarh
11	Total reactive energy export tariff 2	48	INT48	kvarh
12	Reactive power L1 (VAR1)	32	FLOAT32	kvar
13	Power factor L1	32	FLOAT32	
14	Frequency	32	FLOAT32	Hz
15	Tariff	8	INT8	
16	Total apparent energy tariff 1	48	INT48	kVAh
17	Total apparent energy tariff 2	48	INT48	kVAh
18	Apparent power L1	32	FLOAT32	kVA
19	Date/time	32	time	

As an example, the coding of the data record with ID 11 (connection type 1P2W, Mapping 1, i.e. version 33) is more accurately explained in the RSP_UD2 response datagram:

Measured variable ID 11: **Total reactive energy export tariff 2**

BYTE No.	Coding	Description
Byte 1	0x86	DIF value format INT48 -> Integer 6 bytes length
Byte 2	0x20	DIFE tariff 2
Byte 3	0xFB	VIF linear VIF extension -> actual VIF in first VIFE
Byte 4	0x82	VIFE reactive energy / unit kvarh
Bytes 5-6	0x3C	VIFE export
Bytes 7-12	XX XX XX XX XX XX	Integer value of measured variable

ID	Measured variable	Page	Version 33 Mapping 1 DIF/DIFE (default)	Version 33 Mapping 1 VIF/VIFE (default)
1	Total active energy import tariff 1	1	0x86 0x10	0x03
2	Total active energy import tariff 2	1	0x86 0x20	0x03
3	Total active energy export tariff 1	1	0x86 0x10	0x83 0x3C
4	Total active energy export tariff 2	1	0x86 0x20	0x83 0x3C
5	Active power L1	1	0x05	0x2B
6	Voltage PH-N L1	1	0x05	0xFD 0x49
7	Power L1	1	0x05	0xFD 0x5C
8	Total reactive energy import tariff 1	1	0x86 0x10	0xFB 0x02
9	Total reactive energy import tariff 2	1	0x86 0x20	0xFB 0x02
10	Total reactive energy export tariff 1	1	0x86 0x10	0xFB 0x82 0x3C
11	Total reactive energy export tariff 2	1	0x86 0x20	0xFB 0x82 0x3C
12	Reactive energy L1 (Q1)	1	0x05	0xFB 0x17
13	Reactive factor L1	1	0x05	0xFD 0x67
14	Frequency	1	0x05	0xFB 0x2F
15	Actual tariff	1	0x01	0xFD 0x67
16	Total apparent energy tariff 1	1	0x86 0x10	0xFB 0x04
17	Total apparent energy tariff 2	1	0x86 0x20	0xFB 0x04
18	Apparent power L1	1	0x05	0xFB 0x57
19	Date/time	1	0x04	0x6D

DIF / VIF coding for version 33 (1P2W, Mapping 1)

ID	Measured variable	Page	Version 31 Mapping 0 DIF/DIFE	Version 31 Mapping 0 VIF/VIFE
1	Total active energy import tariff 1	1	0x86 0x10	0x03
2	Total active energy import tariff 2	1	0x86 0x20	0x03
3	Total active energy export tariff 1	1	0x86 0x10	0x03
4	Total active energy export tariff 2	1	0x86 0x20	0x03
5	Active power L1	1	0x05	0x2B
6	Voltage PH-N L1	1	0x05	0xFD 0x49
7	Power L1	1	0x05	0xFD 0x5C
8	Total reactive energy import tariff 1	1	0x86 0x10	0xFB 0x02
9	Total reactive energy import tariff 2	1	0x86 0x20	0xFB 0x02
10	Total reactive energy export tariff 1	1	0x86 0x10	0xFB 0x02
11	Total reactive energy export tariff 2	1	0x86 0x20	0xFB 0x02
12	Reactive energy L1 (Q1)	1	0x05	0xFB 0x17
13	Reactive factor L1	1	0x05	0xFD 0x67
14	Frequency	1	0x05	0xFB 0x2F
15	Actual tariff	1	0x01	0xFD 0x67

ID	Measured variable	Page	Version 31 Mapping 0 DIF/DIFE	Version 31 Mapping 0 VIF/VIFE
16	Total apparent energy tariff 1	1	0x86 0x10	0xFB 0x04
17	Total apparent energy tariff 2	1	0x86 0x20	0xFB 0x04
18	Apparent power L1	1	0x05	0xFB 0x37
19	Date/time	1	0x04	0x6D

DIF / VIF coding for version 31 (1P2W, Mapping 0)

Installation 3

3.1 Introduction

WARNING

The use of damaged devices may result in death, serious injury, or property damage.

Do not install or start up damaged devices.

Installation location

The PAC2200 device is mounted on a TH35 rail (complying with EN 60715) and is intended for installation in permanently installed systems, control cabinets or fuse boxes.

NOTICE

Electrostatic sensitive devices

Electronic modules contain components that can be damaged by electrostatic discharge. These modules can be easily damaged by improper handling.

- You must discharge your body electrostatically immediately before touching an electronic component. To do this, touch a conductive, grounded object, e.g., a bare metal part of a switch cabinet or the water pipe.
- Always hold the component by the plastic enclosure.
- Electronic modules should not be brought into contact with electrically insulating materials such as plastic film, plastic parts, insulating table supports or clothing made of synthetic fibers.
- Always place electrostatic sensitive devices on conductive bases.

Note

Avoid condensation

Sudden fluctuations in temperature can lead to condensation. Condensation can affect the function of the device. Store the device in the operating room for at least two hours before commencing installation.

3.2 Installation steps

Procedure

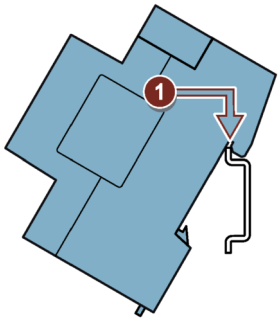

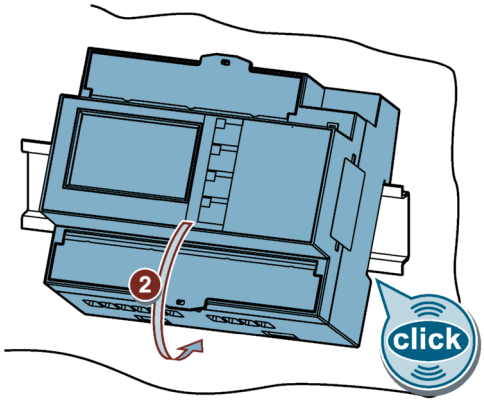

3.3 Removal

Tools

You require the following tools to uninstall the device:

- Slotted screwdriver

Procedure

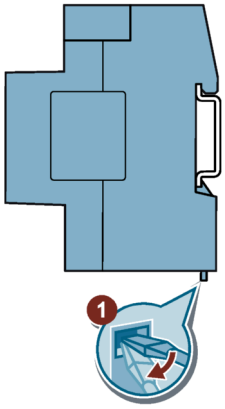

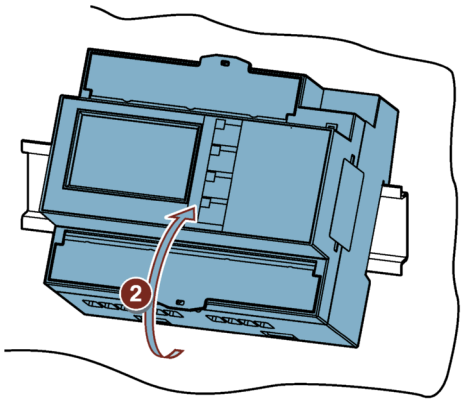

Connection

4

4.1 Safety notes

Notes

DANGER

Hazardous voltage

Will cause death, serious personal injury, or equipment damage.

Turn off and lock out all power supplying this equipment before working on this device.

DANGER

Open transformer circuits will result in electric shock and arc flash hazards

Will cause death, serious personal injury, or equipment damage.

For the 5 A device it is only possible to measure the current via external current transformers. The current transformer circuit is not protected by a fuse. Do not open the secondary circuit of the current transformers under load. Short circuit the secondary current terminals of the current transformer before removing this device. The safety information for the current transformers used must be followed.

WARNING

Hazardous voltage
May cause death, serious personal injury, or equipment damage.

- Always open or disconnect circuit from power-distribution system of building before installing or servicing current transformers.
- The current transformers may not be installed in equipment where they exceed 75 percent of the wiring space of any cross-sectional area within the equipment.
- Restrict installation of current transformers in an area where it would block ventilation openings.
- Restrict installation of current transformers in an area of circuit breaker arc venting.
- Not suitable for Class 2 wiring methods and not intended for connection to Class 2 equipment.
- Secure current transformers and route conductors so that they do not directly contact live terminals or bus.

CAUTION

Voltage input conductors may be damaged.

The fuses in the voltage measuring inputs are only used for cable protection. Selection of the fuse depends on the supply line dimensioning. All commercially available fuses and automatic circuit breakers up to 16 A (C) or 20 A (B) can be used. The relevant applicable regulations must be complied with when selecting the fuse.

Voltage input conductors must be protected.

NOTICE

Short-circuit hazard

Take the maximum possible ambient temperature into account when selecting the connecting cables.

The cables must be suitable for operation at a temperature that is 20 °C higher than the maximum ambient temperature.

Note

Only qualified personnel are allowed to install, commission or service this device.

- Wear the prescribed protective clothing. Observe the general equipment regulations and safety regulations for working with high-voltage installations (e.g. DIN VDE, NFPA 70E, as well as national or international regulations).
- The limits given in the technical data must not be exceeded even during commissioning or testing of the device.
- The secondary connections of intermediate current transformers must be short-circuited at the transformers before the current feeder cables to the device are interrupted.
- Check the polarity and the phase assignment of the instrument transformers.
- Before connecting the device, make sure that the line voltage matches the specifications on the rating plate.
- Before you start commissioning the device, check that all connections are correct.
- Before power is applied to the device for the first time, it must have been located in the operating area for at least two hours in order to reach temperature balance and avoid humidity and condensation.
- Condensation on the device is not permissible during operation.

Note

Prevent capacitive and inductive interference.

Make sure that all data and signal lines are routed separately from control and power supply lines. In order to avoid the risk of capacitive or inductive interference, these cables must never be routed in parallel.

See also

Applying the measuring voltage (Page 64)

Measuring inputs (Page 17)

4.2 Connections

All terminals are fitted with sealable terminal covers

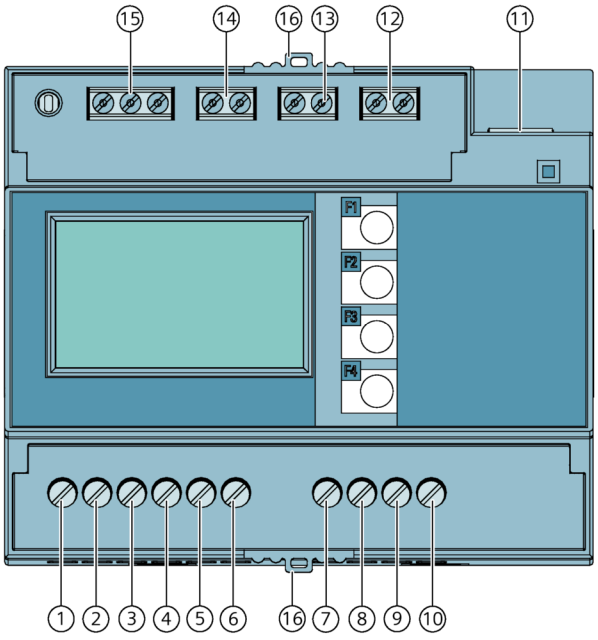

Figure 4-1 PAC2200 (5A) pin assignment

No.	Connection	Function
(1)	IL1 ↑k	Current I_{L1}, input
(2)	IL1 ↓l	Current I_{L1}, output
(3)	IL2 ↑k	Current I_{L2}, input
(4)	IL2 ↓l	Current I_{L2}, output
(5)	IL3 ↑k	Current I_{L3}, input
(6)	IL3 ↓l	Current I_{L3}, output
(7)	V_1	Voltage V_{L1-N}
(8)	V_2	Voltage V_{L2-N}
(9)	V_3	Voltage V_{L3-N}
(10)	V_N	Neutral conductor
(11)	LAN	Ethernet (optional)
(12)	DI	Digital input
(13)	DO	Digital output
(14)	M-BUS	M-BUS interface (optional)
(15)	RS485	RS 485 interface (optional)
(16)	-	Sealing eyelets for sealing the terminal

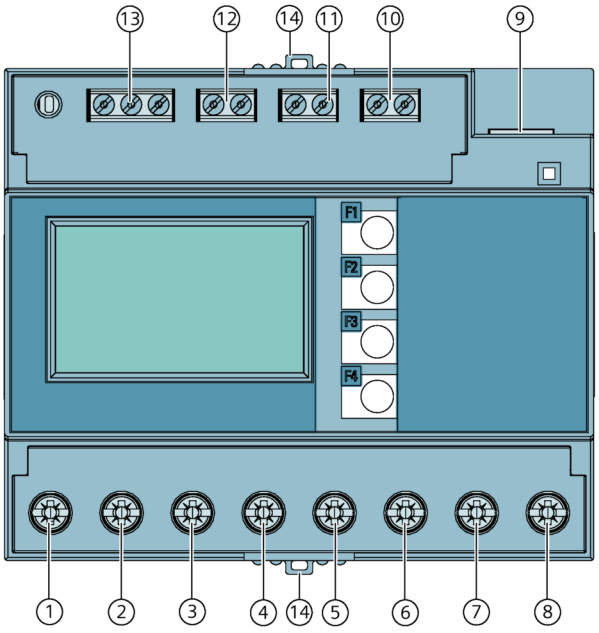

Figure 4-2 PAC2200 (65A) pin assignment

No.	Connection	Function
(1)	IL1 ↑k	Current I_{L1}, input
(2)	IL1 ↓l	Current I_{L1}, output
(3)	IL2 ↑k	Current I_{L2}, input
(4)	IL2 ↓l	Current I_{L2}, output
(5)	IL3 ↑k	Current I_{L3}, input
(6)	IL3 ↓l	Current I_{L3}, output
(7)	N↑	Current N, input
(8)	N↓	Current N, output
(9)	LAN	Ethernet (optional)
(10)	DI	Digital input
(11)	DO	Digital output
(12)	M-BUS	M-BUS interface (optional)
(13)	RS485	RS 485 interface (optional)
(14)	-	Sealing eyelets for sealing the terminal

4.3 Connection examples

Some connection examples for the following types of connection are listed below:

- 3P4W - 3 phases, 4 conductors
- 1P2W - 1 phase, 2 conductors

The selection of the connection types in the device can differ according to the device version.

For the 5 A device, it is only possible to measure the current with current transformers.

For the 65 A device, no current transformers may be connected.

All input or output terminals not required for measuring remain free.

Parameterization of the devices is described in section Parameterizing the device (Page 64).

NOTICE
Grounding of current transformers optional The connection of the transformers and thus also the grounding of the transformers on the secondary side must always be carried out according to the applicable regulations. Grounding of the current transformers on the secondary side is not necessary for use in low-voltage switchboards for performing measuring tasks.

Connection examples for the 5 A device

⚠ CAUTION
Protection of the voltage measuring inputs On the 5 A device, the fuses in the voltage measuring inputs are only used for cable protection. Selection of the fuse depends on the supply line dimensioning. All commercially available fuses and automatic circuit breakers up to 16 A (C) or 20 A (B) can be used. The relevant applicable regulations must be complied with when selecting the fuse.

(1) Three-phase measuring, four conductors, unbalanced load, with three current transformers

Connection type 3P4W

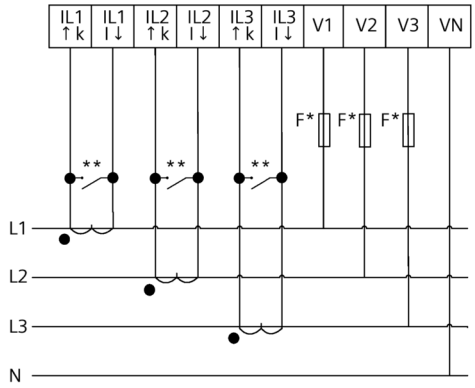

* The fuses are only used for cable protection. All commercially available miniature circuit breakers up to 20 A (B) can be used.

** Install a short-circuit device. Protection against overvoltage when the secondary transformer circuit is open.

Figure 4-3 Connection type 3P4W, with three current transformers

(2) Single-phase measuring, with one current transformer

Connection type 1P2W

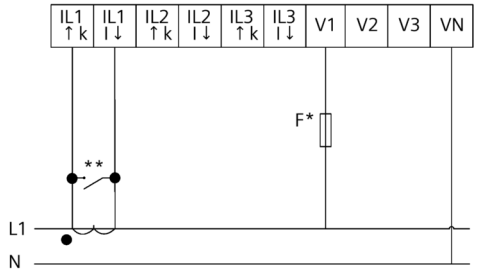

* The fuses are only used for cable protection. All commercially available miniature circuit breakers up to 20 A (B) can be used.

** Install a short-circuit device. Protection against overvoltage when the secondary transformer circuit is open.

Figure 4-4 Connection type 1P2W, with one current transformer

Connection example for the 65 A device

(1) Three-phase measurement, four conductors, direct connection to the low-voltage network

CAUTION

Measuring input protection

On the 65A device, the fuses in the voltage measuring inputs are only used for cable protection. Selection of the fuse depends on the supply line dimensioning. All commercially available fuses and automatic circuit breakers up to 63 A can be used. The relevant applicable regulations must be complied with when selecting the fuse.

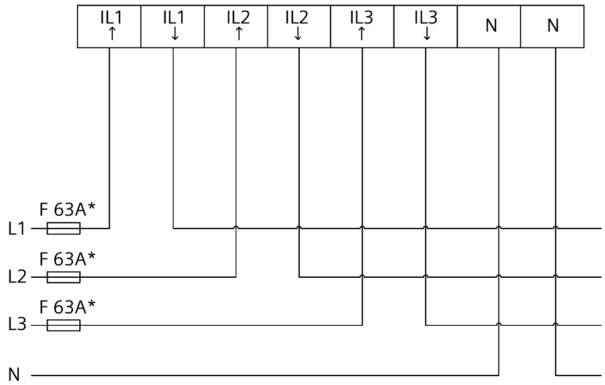

* The fuses up to 63A are only used for cable protection.

Figure 4-5 Direct connection to the low-voltage network.

4.4 Connecting the communication cable

Depending on the device version, the following communication interfaces are available:

- Ethernet
- RS485
- M-BUS

4.4.1 Ethernet communication cable

This interface is available as an option.

Always use a shielded cable for the Ethernet data cable.

1. Plug the RJ45 cable connector into the RJ45 device socket until the connector engages in the socket.

2. Provide sufficient mechanical strain relief for the Ethernet cable.

3. Ground the shield of the cable (see chapter Grounding of the Ethernet/RS485 cable (Page 50)).

4.4.2 RS485 communication cable

This interface is available as an option.

Always use a shielded cable for the RS485 data cable. The data is transmitted differentially via two wires -/A and +/B. The third wire "COM" serves as the common ground potential.

1. Connect the cables Com, +/B and -/A to the appropriate screw terminals on the terminal block.

2. Provide sufficient mechanical strain relief for the RS485 cable.

3. Ground the shield of the cable (see chapter Grounding of the Ethernet/RS485 cable (Page 50)).

4. On the first and last communication nodes, switch a bus terminating resistor between -/A and +/B.

Block diagram

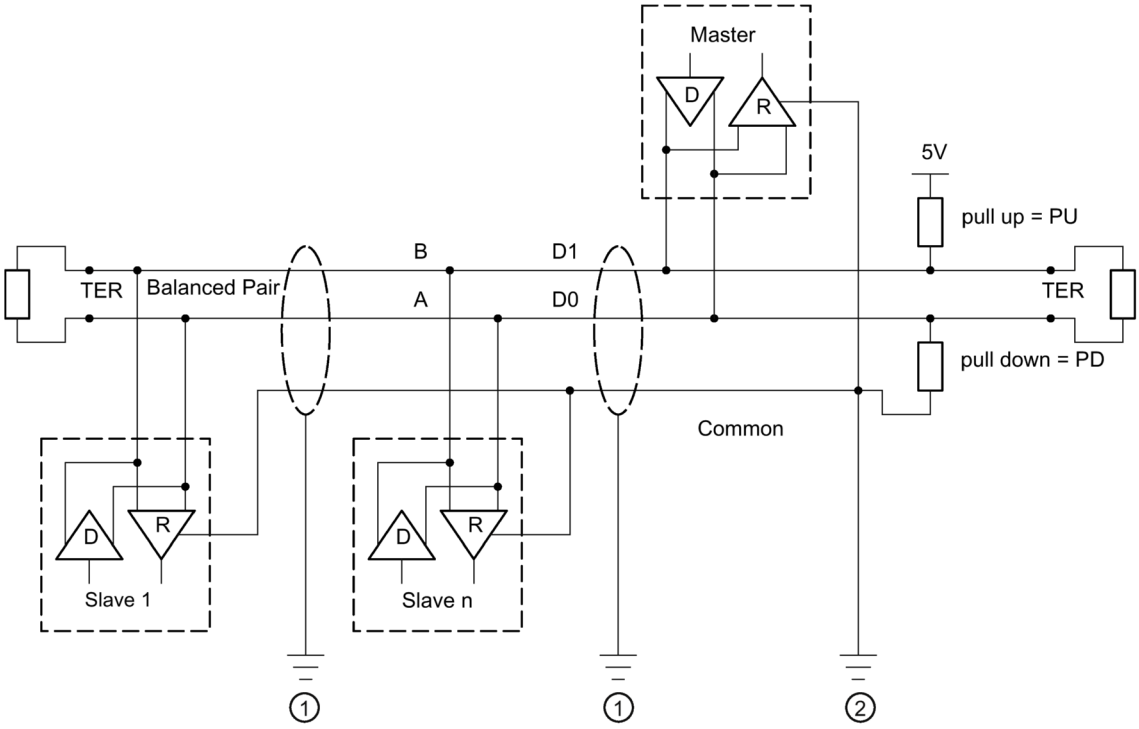

TER	Bus termination resistor (termination)
PU	Pull-up resistor
PD	Pull-down resistor
①	Grounding of the cable shield
②	Grounding of the common line, preferably only at one point for the whole bus

Figure 4-6 Block diagram: General RS485 topology

Grounding of the COM line

Many masters do not have a common terminal. If this is the case, then RS485 common should reference the same functional ground as the master (at a single point). If the master has a common terminal, then the common is connected to it, and it is not connected to functional ground.

Bus terminator

The first and last node in the bus segment must terminate the bus with a terminating resistor.

The PAC3120 does not support bus termination. The bus can be terminated using an external resistor ≥ 120 Ω. Connect the resistor to terminals –/A and +/B of the RS485.

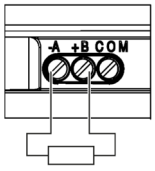

Figure 4-7 Bus termination using external resistor

References

You can find more information in the following specification and the guidelines on the website of the Modbus Organization.

4.4.3 M-Bus communication cable

This interface is available as an option.

An unshielded two-wire line can be used for an M-Bus data cable.

1. Connect the + and - cables to the appropriate screw terminals on the terminal block.
2. Provide sufficient mechanical strain relief for the M-Bus cable.

4.4.4 Grounding of the Ethernet/RS485 cable

NOTICE
The upper limit values will be violated if the cable is not grounded Compliance with the technical limit values for noise radiation and noise immunity is only guaranteed if the cable is correctly grounded. The operator of the system is responsible for ensuring compliance with the statutory limit values (CE mark). Make a shield connection as described here.

Implementation

Ground the Ethernet or RS485 cable near to the PAC2200 measuring device. To do this, expose the foil shield of the cable. Connect the exposed shield to a suitable grounding point on the control cabinet, preferably a shielding bus.

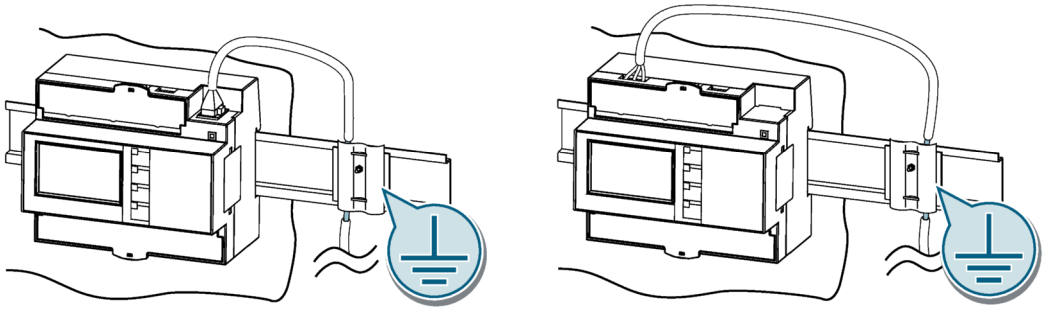

- Be careful not to damage the foil shield of the cable when removing the cable jacket.

  Fasten the exposed shield with a metal cable clamp or alternatively with a hose tie. The clamp must clasp around a large portion of the shield and provide good contact.
- To allow good contact, a tin-plated or galvanically stabilized surface is ideal. With a galvanized surface, the contact should be achieved using suitable screws. A painted surface at the contact point is not suitable.

NOTICE
Loss of contact if the shield connection is incorrectly used for strain relief If the shield connection is used for strain relief, the grounding contact can deteriorate or be completely lost. Do not use the contact point on the cable shield for strain relief.

4.5 Gateway (slave)

The PAC device family has an extensive portfolio. Different devices can combine with or complement each other with regard to functionality.

One very practical application is the use of a PAC4200 device in combination with an RS485 expansion module as a gateway.

This allows devices (slaves) that are connected to the RS485 expansion module of the PAC4200 to be connected to a device over Ethernet (master).

Further information and a configuration description can be found in PAC4200 Manual (https://support.industry.siemens.com/cs/ww/en/view/34261595) (chapter 3.12).

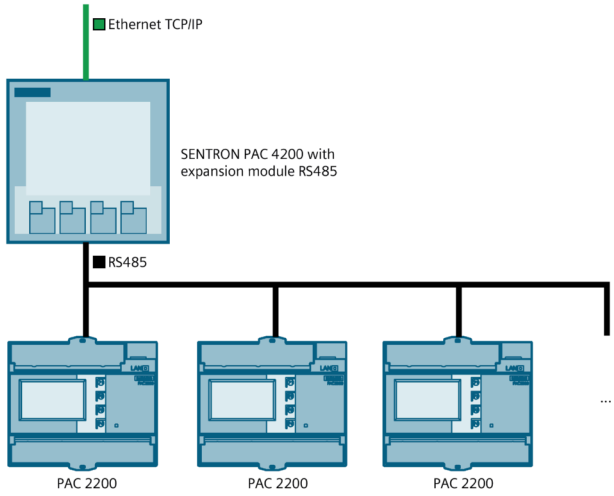

Figure 4-8 Connection of several PAC2200s to the gateway

Note

RS485 termination is recommended

In order to avoid reflection on the bus cable, we recommend fitting a 120 Ohm terminating resistor at the beginning and end of the bus cable.

To establish MODBUS RTU communication, the communication parameters must be known. These include baud rate and format. Furthermore, the slave address must be entered in the PAC2200 device.

See also

PAC4200 Manual (https://support.industry.siemens.com/cs/ww/en/view/34261595)

Operation

5

5.1 Device interface

5.1.1 Displays and operator controls

Depending on the version, the front of the PAC2200 contains the following displays and operator controls:

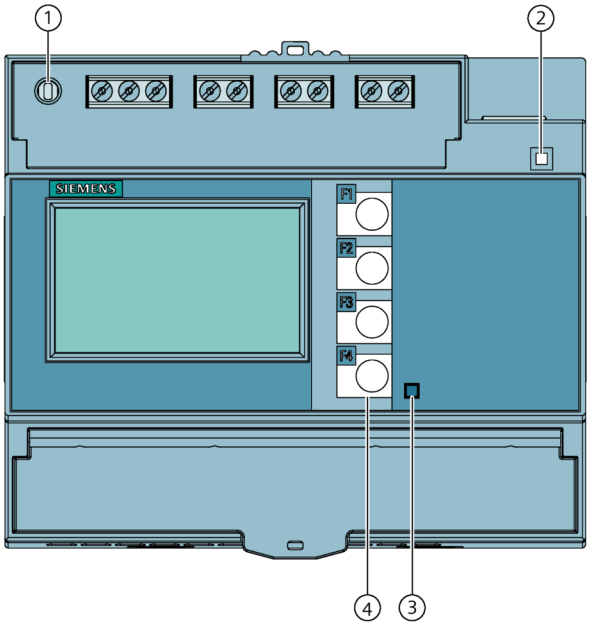

① SW button

② LED for Ethernet (only for devices with Ethernet connection) Link / Activity

- LED is illuminated: Data connection available
- LED flashes: Data is being transferred
- LED is off: No data connection available

③ Active energy pulse indicator

④ Control keys

Figure 5-1 Device interface

5.1.2 SW button

Devices connected to a network are to be protected against unauthorized remote access and possible manipulation.

The physical access of the user to the device is confirmed with the SW button.

In the following cases, the user is prompted to press the button:

- when activating/deactivating the passwords via SENTRON powerconfig
- when activating / deactivating the hardware write protection

5.1.3 Control keys

The device can be operated by means of four keys. The keys are assigned different functions that depend on the menu level used.

Keys	Possible assignment	Meaning
		No function
		Scroll between extended measured values
		Cancel the last action carried out
		Scroll up
		Increment selection
		Scroll down
		Select the editing location
		Decrement selection
		Main menu level
		ON/OFF
		Edit selection
		Confirm selection

5.2 Menu-based navigation

The menu-based navigation is intuitive and self-explanatory. Only the basic structure of the menu-based navigation will be explained for this reason. To simplify the overview, menu screenshots are not included in the manual. The description and function of the individual parameters can be found in chapter Device parameterization (Page 64).

The device menu can be subdivided into four menu levels:

- Measured value level
- Main menu level
- Setting level
- Editing level

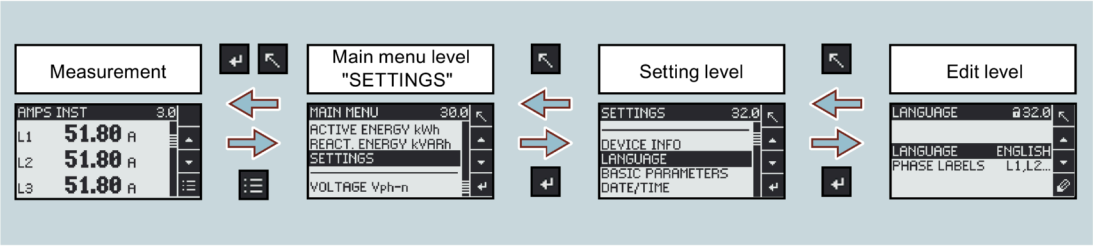

Depending on the device version and firmware status, the availability of the measured values may vary in the measured value and main menu levels. The parameter selection options at the setting and editing levels also depend on the device version and firmware status.

5.2.1 Measured value level

By default, the device is at the measured value level.

At the measured value level, the available measured values can be read off. (All possible measured values are listed in table 2-2 on pages 15-16. The selection of measured values depends on the device version and connection type)

Using the keys ▲ and ▼ you can scroll through the measured values.

When measured values are selected, additional information can be called up with the ▶ key.

The ☰ key returns the device to the "Main menu level".

5.2.2 Main menu level

In this menu level, all available measured variables are listed without measured values. Additionally, the main menu level has a

"SETTINGS"

menu option for configuration of the device.

The ↖ key returns the device to the measured value menu level.

Using the keys ▲ and ▼ you can scroll through the measured variables.

The ↵ key confirms the required selection and takes the device to the measured value level.

In the "SETTINGS" menu option, the device is set to the "Setting level" by actuating the ↵ key.

5.2.3 Setting level

At the setting level, the device can be configured. All settable parameters are listed at this menu level.

The ↖ key returns the device to the main menu level.

Using the keys ▲ and ▼ you can scroll through the setting parameters.

The ↵ key confirms the required selection and takes the device to the editing level.

5.2.4 Editing level

At the editing level it is possible to modify the device parameters.

The ↖ key returns the device to the setting level.

The required value can be adjusted using the ✎ key.

The required value is entered using the ▲ and ▼ keys.

The input is confirmed with the ↵ key.

Each input must be confirmed with the ↵ key, otherwise the change that has been made is not accepted by the device.

5.3 Supporting software

5.3.1 Introduction

The power monitoring system from the SENTRON portfolio allows you to introduce energy management according to the ISO 50001 and ISO 50003 standards and permanently reduce energy costs. In addition to cost savings through optimized consumption, you ensure increased resilience with the monitoring of power supply systems and network quality in infrastructure and industrial plants.

You can find more information on the internet.

Website

5.3.2 powermanager

Using the powermanager energy management software, energy data of the PAC2200 measuring device can be acquired, monitored, evaluated, displayed and archived.

powermanager provides the following functions:

- Tree view of the customer's system (project tree)
- Measured value display with pre-defined user views
- Alarm management
- Demand curve
- Reporting, different report types (e.g. cost center report)
- Load monitoring of reaction plans
- Power peak analysis (available as of powermanager V3.0 SP1)
- Support of distributed plants (systems)
- Archiving system
- User administration

5.3.3 SENTRON powerconfig

The SENTRON powerconfig software is the combined commissioning and service tool for communication-capable metering devices and circuit breakers from the SENTRON family.

The PC-based tool facilitates parameterization of the devices, resulting in substantial time savings, particularly when several devices have to be set up. Power monitoring devices from the 7KM PAC series can be parameterized and operated via various communication interfaces using SENTRON powerconfig and measured values can be documented and monitored.

SENTRON powerconfig provides the following functions:

- Parameterization, documentation, operation and monitoring in one software
- User-friendly documentation of measured values and settings
- Clear presentation of the available parameters including validity testing of the inputs
- Display of the available device statuses and measured values in standardized views
- Project-oriented storage of device data
- Consistent operation and usability
- Support of the various communication interfaces (Modbus RTU, Modbus TCP, PROFIBUS, PROFINET)
- Updating of device firmware and loading of language packs (device-dependent)

Note

You launch the Online Help in SENTRON powerconfig by pressing the *F1* key.

5.3.4 Web server

The device can be read out with a PC/notebook via a website using the web server integrated in the device. Communication is performed via the Modbus TCP protocol.

The web server provides the following functions:

- Device information such as serial number, firmware status etc.
- View and evaluation of the measured values

Start web server:

1. Connect the device to the PC or network via the Ethernet interface.
2. Make sure that the PAC2200 and the configuration computer are in the same subnet.
3. Enter the IP address of the device in the browser.

HTTP-Port: 80 (default setting)

Note

The web server can be deactivated with the HTTP Port: 0 setting.

5.4 Protection against manipulation

5.4.1 Introduction

The PAC2200 is equipped with a range of mechanisms to protect against deliberate and inadvertent device manipulation.

- Password protection
- Hardware write protection
- IP filter
- Configurable Modbus TCP port
- Housing seal and sealing

The closed padlock symbol in the display title indicates whether "password protection" or "hardware write protection" is activated.

The device is protected against write access.

The device is not protected against write access.

5.4.2 Password protection

Password protection prevents write access via the device interface and the

communication interfaces, in particular:

- Changing of device settings, including password.
- Changing and deletion of values/parameters.
- Deletion of data and memory content.
- Resetting to factory settings.

Reading out of measured values and memory content is still possible when password protection is active.

As soon as the password has been entered in the device once, it is not requested again as long as the "SETTINGS" menu level remains active.

Password policy is a four-digit number from 0000 to 9999. (Default password: 0000)

If no user-specific password has been assigned, the default password must be entered when password protection is switched on. The currently valid password becomes visible on the display when password protection is switched off. The password remains saved and becomes effective again the next time password protection is switched on.

Note

Before switching on password protection, make sure that you and the group of authorized users are all in possession of the password.

If password protection is switched on, you need the password for all changes to the device settings. You also require the password to call the "PASSWORD" dialog box again in order to switch off access protection or to change the password.

Note

If you have forgotten the password, please contact Technical Support. You will receive a new password from them.

5.4.3 Hardware write protection

The hardware write protection prevents write access to the device, both via the communication interface and on the display.

In order to gain write access, the hardware write protection must be deactivated directly on the device.

The hardware write protection cannot be deactivated via a communication interface.

To activate or deactivate the hardware write protection, the user is prompted to press the SW button on the device. The request to do so appears on the display for 15 minutes.

If the SW button has not been pressed once 15 minutes have expired, the change is not applied and the request message on the device display disappears.

5.4.4 IP filter (subnet firewall protection)

The IP filter, also called subnet firewall protection, is a configurable protection on the device. If the protection is activated, write requests are only accepted if the user is in the same subnet.

5.4.5 Modbus TCP port, configurable

Ports are communication channels which make it possible to access a Modbus-capable device via a network.

Standard IP ports like port 502 are often tested by port scanners. If an open port is discovered by an attacker, the device can be attacked via this port.

The PAC2200 allows the Modbus TCP ports to be configured manually. Switching from standard port 502 to a user-defined port makes it more difficult to scan for open ports.

5.4.6 Housing seal and sealing

Seal label:

The seal label protects the device from unauthorized access and possible manipulation inside the device.

The device has two seal labels. The seal is multilayered. After removing or damaging the sticker, the word "Void" remains on the device housing.

Note

Expiration of the warranty claim due to damage or removal of the seal label

If the seal label is damaged or removed, the warranty becomes invalid.

The device is not certified for billing purposes.

Seal:

The device has two sealing eyelets for sealing the terminals.

The sealing of the connections prevents the manipulation of connections and thus also possible energy theft.

Commissioning

6

6.1 Overview

Prerequisites

- The device has been installed.
- The device has been connected in accordance with the possible connection methods.

Steps for starting up the device

1. Apply the measuring voltage
2. Parameterize the device
3. Check measured values

NOTICE
Check the connections Incorrect connection can result in malfunctions and failure of the device. Before starting up the PAC2200, check that all connections are correct.

NOTICE
Disconnect device prior to insulation test When performing an insulation test of the entire installation with AC or DC, the device should be disconnected before starting the test.

6.2 Applying the measuring voltage

The device is supplied with power via the measuring voltage.

Please consult the technical data or the type plate for the type and level of the possible supply voltage.

Note chapter Connections (Page 43)

WARNING

Do not apply voltage in excess of the rated voltage limit
Can cause death, serious personal injury, or equipment damage.

The maximum voltage listed in the technical data and on the rating plate must not be exceeded.

6.3 Parameterizing the device

6.3.1 Parameterizing with SENTRON powerconfig

You can download the SENTRON powerconfig configuration software from the Industry Online Support Website (https://support.industry.siemens.com/cs/document/63452759/update-version-powerconfig-v3-7?dti=0&lc=en-WW).

Information and notes on how to use SENTRON powerconfig can be found in the Online Help of the configuration software or by contacting Technical Support.

You launch the Online Help in SENTRON powerconfig by pressing the "F1" key.

In order to be able to configure the PAC2200 measuring device, measuring voltage must be connected and communication to the device established.

Establishing connection to the device

To establish a connection to the PAC2200, proceed as follows:

1. Connect the PAC2200 device to the PC or network.
2. When you have connected the device via Ethernet, make sure that the PAC2200 and the configuration computer are in the same subnet.
3. Open the powerconfig configuration software.
4. On the toolbar, click on the "Search for accessible devices" key or alternatively press the "F11" key. The "Search for accessible devices" window is displayed.

5. In the "Search for accessible devices" window, click on the "Ethernet" tab if you want to access the device via Ethernet or "Serial" if

   you want to access the device via the RS485 interface:

   The "Ethernet" view appears when "Ethernet" is selected:

   – Select the Ethernet interface from the selection list.
   – Click on the "Start search" button.
   – Select the desired device.
   – If necessary, adapt the communication settings.
   – To do this, switch the edit mode to "Unlocked". Carry out the required settings in the menu options "IP address", "Network mask", "Gateway" etc. Click on the button "Load changes to configuration parameters into device(s)".

   The "Serial" view appears when "Serial" is selected:

   – Select PAC2200 in the "Search for device" option.
   – Enter the communication settings (COM, Port; Address; Baud rate; Format and Protocol).
   – Click on the "Start Search" button.

6. All devices found are shown in the "Result" window.
7. Select the desired device and click on the "Create devices" button.

   The selected device is added.

8. In menu item "Views", select the sub-menu "Parameters".

   The "Parameter" window is displayed.

9. In the "Properties" window, click on the "Load to PC" button.

   The configuration is loaded from the device to the PC.

Parameterizing the device

The parameters are entered and changed in offline mode.

To switch between online and offline mode, click "Activate online view" in the "Options" menu or press the "F12" key.

Set the required basic parameters.

Note the description of the parameters in chapter Parameterizing via the device menu (Page 68).

Make use of the Online Help in SENTRON powerconfig.

In order to load the parameters to the device, proceed as follows:

1. Integrate the device in SENTRON powerconfig.
2. In menu item "Views", select the sub-menu "Parameters" or alternatively press the "Ctrl" and "Pos1" buttons simultaneously.

   The "Parameter" window is displayed.
3. In the "Parameters" window, click on the "Load to PC" button.

   The set parameters are loaded to the device.
4. Check the device parameters and adjust them if necessary. The parameters can only be changed in offline mode.

   More detailed information on parameterization can be found in the powerconfig Online Help or in chapter Parameterizing via the device menu (Page 68).
5. In the "Parameters" window, click on the "Load to device" button.

   The set parameters are loaded to the device.

"Security" parameter

Activate security with SENTRON powerconfig:

1. In menu item "Views", select the sub-menu "Security".

   The "Security" window is displayed.
2. In the menu item "Options", select "Activate online view".

   The "Security" window is refreshed. The following degrees of protection can be activated/deactivated
   - Password protection
   - Hardware write-protection
   - Subnet firewall protection (IP filter)

"Password protection" parameter

When using password information, write access is possible by means of the SENTRON powerconfig software.

The password is only required when the "Password protection" parameter is activated.

As soon as the password has been entered once for the device, it is not requested again. The set password can be deleted from the memory in menu item "Password management".

Two different password types are available:

- Device password: Valid for one device only
- Global password: Valid for multiple devices

  (A global password simultaneously unlocks multiple devices in which the “Global password” has been defined).

ON: Write access is password protected by means of communication.

OFF: Password protection deactivated

(default setting: OFF)

Password policy: Four-digit number between 0000-9999

(default setting 0000)

Activation or deactivation of the password protection must be confirmed on the device. The request message "PRESS SW" appears on the display for 15 minutes. By pressing the SW button on the device during this phase, the protection function is activated or deactivated. If the button has not been pressed once 15 minutes have expired, the changes are not applied and the request message on the device disappears.

If the button has not been pressed once 15 minutes have expired, the changes are not applied and the request message on the device disappears.

If the password protection is entered incorrectly, this action can only be repeated after a short delay.

Every repeated incorrect password entry results in an extension of the delay period between entry possibilities.

Note

If you have forgotten the password, please contact Technical Support. You will receive a new password from them.

"Hardware write-protection" parameter

No write access is possible, even if password information is used. In order to gain write access, the hardware write protection must be deactivated.

ON: Hardware write protection is activated.

OFF: Hardware write protection is deactivated

Activation or deactivation of the password protection must be confirmed on the device. Request message "PRESS SW" appears on the display for 15 minutes. By pressing the SW button on the device during this phase, the protection function is activated or deactivated. If the button has not been pressed once 15 minutes have expired, the changes are not applied and the request message on the device disappears.

If the button has not been pressed once 15 minutes have expired, the changes are not applied and the request message on the device disappears.

"Access protection IP filter" parameter

The IP filter is a configurable access protection. If activated, Modbus TCP write commands are only accepted if the remote station is located in the same subnet.

Note

It is recommended to activate the hardware write protection on the device.

6.3.2 Parameterization via the device menu

The PAC2200 device can be parameterized via the "Settings" menu option. See chapter Menu-based navigation (Page 55).

"Language" parameter

The language of menu-based navigation and of the measured value displays can be set in the "Language" menu item.

Selection	Range	Factory setting
Language	English, German	English
Phase designation	• L1, L2, L3 • a, b, c	L1, L2, L3

"Basic settings" parameter

Not available for 65 A devices.

"Voltage Input" parameter

(Settings not available for MID devices)

Selection	Range	Factory setting
CONNECTION TYPE	• 3P4W: 3 phases, 4 conductors • 1P2W: 1 phase, 2 conductors	3P4W

The "Connection type" parameter limits the total number of measured variables. The input circuit of the device must correspond to the parameterized connection type.

Inform the device of the connection type used by entering the connection type code in the device settings.

"Current input" parameter

The "Current input" parameter specifies the values for the current input.

When measuring using current transformers, the device must know the current conversion ratio.

For this purpose, the primary and secondary current must be specified in the fields "PRIMARY CURRENT" and "SECONDARY CURRENT".

Selection	Range	Factory setting
PRIMARY CURRENT	Freely adjustable. Range: 1 A ... 99999 A	50 A
SECONDARY CURRENT	Range: 1 A, 5 A	5 A

Selection	Range	Factory setting
DISPLAY RANGE	Freely adjustable. Range: 1 A ... 99999 A	1 A
INVERT CURRENT L1/L2/L3 (Not available for MID devices)	The device interprets the current flow direction opposite to the wiring. Separate setting direction for each phase. **No:** • The device interprets the current flow direction corresponding to the wiring. **Yes:** • The direction of current flow is inverted. The device interprets the current flow direction	No

"Write protection" parameter

The "Write protection" parameter is described later in this chapter.

"Date/Time" parameter

The date and time can be set by using the "Date/time" option in the "Settings" menu.

Selection	Range	Factory setting
DATE	Current date The date format is defined in the FORMAT field.	–
FORMAT	DD.MM.YYYY (day – month – year) MM/DD/YY (month – day – year) YYYY-MM-DD (year – month – day)	DD.MM.YYYY
TIME	HH:MM:SS	
TIME ZONE	Time zone, refers to coordinated universal time (UTC) –12:00 ... +14:00, in 30-minute intervals Examples: • **No:** "–06:00" corresponds to UTC-6 • **Yes:** "+01:00" corresponds to UTC+1	00:00

Selection	Range	Factory setting
DAYL.SAVING	Automatic change of time from standard time to daylight saving time and from daylight saving time to standard time. • **OFF:** Time change is switched off • **Auto EU:** Time change within the European Union, changeover to daylight saving time: The internal clock is put forward from 1 a.m. UTC to 2 a.m. UTC on the last Sunday in March. Changeover to standard time: The internal clock is put back from 2 a.m. UTC to 1 a.m. UTC on the last Sunday in October. • **Auto US:** Time change within the USA, changeover to daylight saving time: The internal clock is put forward from 2 a.m. local time to 3 a.m. on the second Sunday in March. Changeover to standard time: The internal clock is put back from 2 a.m. local time to 1 a.m. on the first Sunday in November. • **Table:** Time change can be individually parameterized. The parameters can be set in the software.	OFF
SNTP (with Ethernet interface only)	Protocol is used for transmitting and synchronizing the time. • **OFF:** The device interprets the current flow direction corresponding to the wiring. • **ACTIVE:** The device automatically requests the time from the NTP server. • **BCST client:** The device receives time frames which are sent from an NTP server.	OFF
IP (only when SNTP is activated)	If an SNTP IP address is configured, only data from this IP address is accepted.	0.0.0.0

"Integrated I/O" parameter

"Digital input" parameter

The following functions can be assigned to the "Digital input" parameter:

- Tariff switching for two-tariff, active energy, and reactive energy counters.
- Synchronization of the measuring period by means of the synchronization pulse of a system control center or other device.
- Control of display backlighting

Selection	Range	Factory setting
ACTION	• **NONE:** Input is deactivated. • **PULSE INPUT:** Counting of input pulses • **HT/LT SWITCHING**: Switching between tariffs. Low tariff if input active. • **DEMAND SYNC:** Synchronization of power demand. • **Display backlighting**: Backlighting is activated with the rising edge. Deactivation takes place after the delay time has elapsed. Delay time is specified in the "DISPLAY" menu by selecting "DIM AFTER".	NONE
UNIT	The "UNIT" property is only visible if "PULSE INPUT" is set for the "ACTION". Countable unit with pulse counting: • Active Energy (kWh) • Reactive Energy (kvarh)	—
PULSES PER UNIT	The "PULSES PER UNIT" property is only visible if "PULSE INPUT" is set for the "ACTION". Range: 1 to 4000	1
PRO (input pulse divider)*	The "PULSES PER UNIT" property is only visible if "PULSE INPUT" is set for the "ACTION". Range: 1; 10; 100; 1000	1

)* Formula:

$$\frac{\text{Pulses per unit}}{\text{Pulse divider x unit}} = \text{Pulse value}$$

Example:
Pulses per unit: 50
Pulse divider: 100
Unit: kWh

$$\frac{50}{100\ \text{kWh}} = 0.5\ \text{pulses per kWh} \quad = 500\ \text{pulses per MWh}$$

"Digital output" parameter

The following functions can be assigned to the "Digital output" parameter:

- Energy pulse output; can be programmed for active or reactive energy pulses
- Indication of the direction of rotation
- Operating state display of the device
- Switching output for remote control via the interface

Selection	Range	Factory setting
ACTION	• **OFF:** Output is deactivated. • **DEVICE ON:** Output signals that the device is switched on. • **REMOTE CONTROL**: Output is controlled by remote access. • **DIRECTION OF ROTATION:** Output is switched on by an electric counter-clockwise rotating field and remains active for as long as the field is rotating in this direction. • **PULSE:** Digital output signals the number of pulses set for each energy unit (e.g. kWh). The energy counter specified in the "COUNTER SOURCE" field is evaluated here.	OFF
PULSES PER UNIT	The "PULSES PER UNIT" property is only visible if "PULSE INPUT" is set for the "ACTION". Range: 1 to 4000	1
PRO (Output pulse divider)	The "PULSES PER UNIT" property is only visible if "PULSE INPUT" is set for the "ACTION". Range: 1; 10; 100; 1000	1
UNIT	Selects the type of cumulative power and the import value that triggers the pulse when that value is reached. • Counter Import Active Energy (kWh) • Counter Export Active Energy (kWh) • Counter Import Reactive Energy (kvarh) • Counter Export Reactive Energy (kvarh)	Counter Import Active Energy (kWh)
PULSE LENGTH	The "Output pulse divider" property is only visible if "Energy pulse" is set for the "USAGE TYPE". Length of energy pulses. Range: 30 ms to 500 ms	100 ms

"Communication" parameter

The number of available communication interfaces can vary depending on the version of the device.

"MODBUS TCP" parameter (optional)

The "MODBUS TCP" parameter is only available for devices with an Ethernet interface.

Selection	Range	Factory setting
MAC	MAC address. Read only.	–
DHCP	(Dynamic Host Configuration Protocol) • OFF • ON If the DHCP is activated, network configurations are automatically assigned. This enables automatic integration of devices into an existing network. If the DHCP is activated, network configurations cannot be adjusted manually.	ON
IP	IP address: 000.000.000.000 Manual setting of the IP address is only possible when DHCP is deactivated.	–
SN (subnet mask)	Subnet address: 000.000.000.000 Manual setting of the subnet is only possible when DHCP is deactivated	–
LIMIT (gateway)	Gateway address: 000.000.000.000 If data exchange with an IP address which is not in the home subnet is required, the data can be transmitted via a gateway. Gateway interconnects different networks. Manual setting of the gateway is only possible when DHCP is deactivated.	–
PORT	Modbus port: 0 to 65534	502
IP FILTER	• OFF: IP filter deactivated • ON: Write access is rejected if the remote station is in another subnet. The IP filter, also called subnet firewall protection, is a configurable protection on the device. If the protection is activated, write requests are only accepted if the user is in the same subnet.	OFF
HTTP PORT (web server)	Manual setting of the HTTP port (web server): 0 to 65534 With the HTTP port 0 setting, the web server is deactivated.	80

"MODBUS RTU" parameter (optional)

The "MODBUS RTU" parameter is only available for devices with an RS485 interface.

Selection	Range	Factory setting
ADDRESS	Range: 1 to 247	126
BAUD RATE	Range: 4800 / 9600 / 19200 / 38400 / 57600 / 115200	19200
FORMAT	8N1 / 8N2 / 8E1 / 8O1	8N2
RESPONSE TIME	Range: 0 to 255 ms	0 ms

"M-BUS" parameter (optional)

The "M-BUS" parameter is only available for devices with an M-BUS interface.

Selection	Range	Factory setting
PRIMARY ADDRESS	Range: 0 to 250	0
SECONDARY ADDRESS	The secondary address is generated automatically from the serial number of the device.	–
BAUD RATE	1200 / 2400 / 4800 / 9600	9600

"Display" parameter

Selection	Range	Factory setting
CONTRAST	The display contrast can be adjusted in steps. Range: 1 - 10	5
BRIGHTNESS	The intensity of the backlighting can be adjusted in steps. Range: 0 - 3	3
BACKL.DIMMED	The dimming setting of the display can be adjusted in steps. Range: 0 - 3	3
DIM AFTER	On expiry of the set period, the backlighting is dimmed to the set intensity. Range: 0 - 99	3
TEST INDICATOR	Display test indicator. For testing the functional capability of the display.	–
DEFAULT MENU	Menu display number for the default menu. The device always starts up with the menu display defined here. Range: 1 - 12	1
TIMEOUT	When the specified time has elapsed, the device automatically returns to the defined default menu. Range: 0 s - 3600 s (0 = function deactivated)	0

"Extended" parameter

"Password" parameter

Selection	Range	Factory setting
DISPLAY	• **No** Password deactivated • **Yes** Write access is password protected using keys on display	No
COMMUNICATION	• **No** Password protection deactivated • **Yes** Write access is password protected by means of communication	No
PASSWORD	Password policy four-digit number. Value range: 0000 to 9999	0000

The write access to the device settings can be protected by means of a password.

As soon as the password has been entered once for the device, it is not requested again for as long as the device is still in the "Settings" menu.

Password protection prevents the following actions:

- Changing of device settings, including password
- Changing and deletion of values
- Deletion of data and memory content
- Setting and resetting of counts
- Resetting to factory settings

Reading out of measured values and memory content is possible without restriction when password protection is active.

"Reset" parameter

Selection	Range	Factory setting
FACTORY SETTINGS	All device settings and measured values except the communication parameters and energy secondary values are reset to the as-delivered condition. • **No** Not active • **Yes** Active	No
COMMUNICATION PARAMETERS	All communication settings are reset to the as-delivered condition. • **No** Not active • **Yes** Active	No
EXECUTE	Confirmation of the reset	-

Note

The reset must be confirmed by selecting the "EXECUTE..." field. Otherwise the device reset is not executed.

"Write protection" parameter

Selection	Range	Factory setting
WRITE PROTECTION	• **No** Not active • **Yes** Active	No
PRESS SW	The physical access of the user to the device is confirmed with the SW button. When activating or deactivating the write protection, the request "PRESS SW" appears on the display. If the SW button has not been pressed once 15 minutes have expired, the changes are not applied and the request message on the device display disappears.	–

The hardware write protection prevents write access to the device, both via the communication interface and on the display.

In order to gain write access, the hardware write protection must be deactivated directly on the device.

The hardware write protection cannot be deactivated via a communication interface. The user must press the SW button directly on the device to activate or deactivate the hardware write protection function.

Service and maintenance

7

7.1 Cleaning

Clean the device as required. Use a dry cloth for this.

NOTICE
Damage may result from use of detergents. Detergents can damage the device. Do not use detergents.

7.2 Calibration

The device has been calibrated by the manufacturer before shipping. Recalibration is not required provided the environmental conditions are maintained.

7.3 Firmware updates

The PAC2200 supports firmware updates.

An operating system update can be carried out on MID-approved devices.

When updating, always use the latest version of the configuration software SENTRON powerconfig. For update instructions, please see the related documentation and the online help for the configuration software. The last devices settings made remain unchanged.

7.4 Troubleshooting guide

Remedies for the resolution of faults

Fault	Remedies
Device is not working	• Check power supply • Check fuse
Voltage or current measured values are not displayed	• Check fuse • Check configuration (see Parameterizing the device (Page 64))
Voltage values are not plausible	• If a voltage transformer is available, check the settings and the connection of the voltage converter and correct if necessary
Current values are not plausible	• Check the settings and the wiring of the current transformer (if present) and correct if necessary
No communication	• Check the communication settings (incorrect IP address, incorrect subnet, incorrect Modbus TCP port or gateway?) • Check firewall, if present (possibly preventing communication to the Modbus ports)
Power values are incorrect, although voltage and current are correctly applied	• Check voltages and currents of the phases (not properly connected to one another) • Check the polarity of the current transformer, if present
Fault indication in the display menu: "MID VOID"	• The device is defective and cannot be repaired. • The device may no longer be used for billing.

If the device fault cannot be remedied by the measures given above, the device is probably defective.

More help can be found on the Internet.

Technical Assistance (https://www.siemens.com/lowvoltage/support-request)

If the device is defective, please proceed as follows:

- See chapter Warranty (Page 81), if the device has become defective within the warranty period.
- If the device has become defective outside the warranty period, then the device must be disposed of in accordance with local disposal regulations.

See also

Technical Assistance (https://www.siemens.com/lowvoltage/support-request)

7.5 Warranty

Procedure

Note

Loss of warranty

Opening the device invalidates the Siemens warranty. Only the manufacturer is permitted to carry out repairs to the devices. Return faulty or damaged devices to Siemens for repair or replacement.

If the device is faulty or damaged, proceed as follows (only during the warranty period):

1. Uninstall the device; refer to section Removal (Page 40).
2. Pack the device in a suitable manner to prevent it from being damaged during transport.
3. Return the device to Siemens. You can obtain the address from:
   - Your Siemens sales partner
   - Technical Assistance

Note

The contents of this manual shall not become part of or modify any prior or existing agreement, commitment, or contractual relationship. All Siemens obligations derive from the respective sales contract, which also contains the complete and exclusive warranty agreement. These contractual warranty requirements are neither extended nor restricted by the implementation of this Operating Manual.

See also

Latest information (Page 8)

Disposal of waste electronic equipment

Waste electronic equipment must not be disposed of as unsorted municipal waste, e.g. household waste. When disposing of waste electronic equipment, the current local national/international regulations must be observed.

Technical specifications

8

8.1 Technical specifications

Device configuration

- 1 optically isolated digital input
- 1 optically isolated digital output
- 1 Ethernet interface, for connecting and configuring to the PC or network (optional)
- 1 M-Bus connection for reading out the measured values (optional)
- 1 RS485 port for readout and configuration (optional)

Measurement

Only for connection to AC voltage systems

Measuring method	
For voltage measurement	True root-mean-square measurement (TRMS)
For current measurement	True root-mean-square measurement (TRMS)

Measured value acquisition	
Energy	Contiguous (zero blind measuring)
Current, voltage	Contiguous (zero blind measuring)
Waveform	Sinusoidal or distorted
Frequency of the relative fundamental	50 / 60 Hz (MID devices only 50 Hz)
Measured value acquisition mode	Automatic line frequency detection

Measuring inputs for voltage (5 A/65 A devices)

Measuring inputs	
Voltage $U_{n\ (L\text{-}N\ /\ L\text{-}L)}$	100 V / 173 V AC, 50 / 60 Hz 230 V / 400 V AC, 50 / 60 Hz (MID devices only 50 Hz)
Max. measurable voltage	
Voltage L-N	230 V 3AC (+20%)
Voltage L-L	400 V 3AC (+20%)
Min. measurable voltage	
Voltage L-N	100 V 3AC (-80%)
Voltage L-L	173 V 3AC (-80%)

Measuring inputs	
Zero point suppression level	
Voltage L-N	7 V
Voltage L-L	10 V
Impulse withstand voltage	6.5 kV (1.2 / 50 µs)
Measuring category	CAT III (acc. to IEC 61010-2-030)
Input resistance (L-N)	1 MΩ

Measuring inputs for current (5 A device)

Only for connection to AC systems via external current transformers (5 A device)

Measuring inputs	
Rated current In I_e	1 A / 5 A
Max. permissible continuous current	10 A
Current impulse overload capability	100 A for 1 s
Zero point suppression level	< 1 mA
Measuring range	1 ... 120%
Apparent power consumption	
Measuring range 1 A / per phase	4 mVA
Measuring range 5 A / per phase	115 mVA

Measuring inputs for current (65 A device)

For direct connection to the AC system.

Measuring inputs	
Reference current Iref (acc. to EN 50470-1)	10 A
Max. input current Imax	65 A
Current impulse overload capability	1990 A for 10 ms
Zero point suppression level	< 20 mA
Measuring range	0.5 ... 65 A

Power supply (5 A and 65 A devices)

Power supply	
Design of the power supply	Wide range AC power supply
Work area	100 V - 230 V +/- 20%
Power consumption	5 VA
Overvoltage category	OVC III

Measuring accuracy

Applied standards:

- IEC 61557-12
- IEC 62053-21
- IEC 62053-22
- IEC 62053-23
- EN 50470-3:

Measured variable	Accuracy class acc. to IEC 61557-12 (K55)
Voltage	Class 0.5
Current	Class 0.5
Apparent power	Class 1
Active power	Class 1
Reactive power	Class 1
Total apparent power over all phases	Class 1
Total active power over all phases	Class 1
Total reactive power VAR1 over all phases	Class 2
Cumulated active power	Class 1
Cumulated reactive power	Class 2
Total power factor	Class 0.5
Line frequency	Class 0.05
Active energy	Class 1
Reactive energy	Class 2
Active energy according to IEC62053-21	Class 1
Reactive energy according to IEC62053-23	Class 2
Measurement accuracy according to EN50470-3	Class B

Note:

For transducer-measuring devices, the accuracy of the measurement depends on the quality of the current transformers used.

Digital input

Digital input		
Number		1
Type		Passive
Input voltage		
	Rated value	24 V DC
	Maximum input voltage	30 V DC
Input current		
	"1" signal detection	2.5 ... 10 mA
	"0" signal detection	≤0.5 mA

Digital output

Digital output	
Number	1
Type	Passive
Design/function	Switching output or pulse output
Rated voltage	0 ... 30 V DC, typical DC 24 V (SELV or PELV supply)
Output current	
For signal "1"	Depends on the load and the external power supply
Continuous load	≤50 mA (thermal overload protection)
Transient overload	≤130 mA for 100 ms
For signal "0"	≤0.2 mA
Internal resistance	30 Ω
Overvoltage category	CAT I
Pulse output function	
Standard for pulse emitter	Signal characteristics in accordance with IEC 62053-31
Adjustable pulse duration	30 ... 500 ms
Min. settable time frame	10 ms
Max. switching frequency	17 Hz
Short-circuit protection	Yes

Communication

Ethernet interface (optional)	
Protocols	Modbus TCP; web server (HTTP); SNTP; DHCP
Ethernet connection	RJ-45
Data rate	10 / 100 Mbps

M-BUS interface (optional)	
Protocol	M-BUS
Connection	2-pole
Baud rate:	1200 / 2400 / 4800 / 9600

RS485 interface (optional)	
Protocol	MODBUS RTU
Connection	3-pole
Baud rate	4800 / 9600 / 19200 / 38400 / 57600 / 115200
Format	8N1 / 8N2 / 8E1 / 8O1

Connection elements

The specified conductor cross-sections describe the capacity of the connection terminals. When selecting the conductor cross-sections, always pay attention to the possible current load and ensure adequate cable protection.

Current, power supply	5 A device	65 A device
Conductor cross-section for copper cable (Cu)		
Rigid 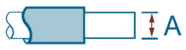	0.2 ... 6.0 mm² [AWG 24...10]	1.5 ... 35mm² [AWG 16 ... 2]
Flexible 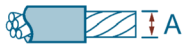	0.2 ... 4.0 mm² [AWG 24...12]	1.5 ...35 mm² [AWG 16 ... 2]
Flexible with end sleeve, without plastic sleeve	0.2 ... 4.0 mm² [AWG 24...12]	1.5 ... 25 mm² [AWG 16 ... 4]
Flexible with end sleeve and plastic sleeve	0.25 ... 4.0 mm² [AWG 24...12]	1.5 ... 25 mm² [AWG 16 ... 4]
2-wire, same cross-section		
Rigid 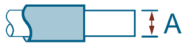	0.2 ... 1.5 mm² [AWG 24 ... 16]	-
Flexible	0.2 ... 1.5 mm² [AWG 24 ... 16]	-
Flexible with end sleeve, without plastic sleeve	0.25 ... 0.75 mm² [AWG 24 ... 19]	-
Flexible with TWIN end sleeve and plastic sleeve	0.5 ... 2.5 mm² [AWG 20 ... 14]	-
Tightening torque	0.5 ... 0.6 Nm [4.4 ... 5.3 lb-in]	3 Nm [26.6 lb-in]
Conductor cross-section for copper cable (Cu) for UL market	AWG 10 ... 4 Solid or stranded with ferrules	
Conductor cross-section for copper cable (Cu) for CSA market	AWG 8 ... 4 Compact stranded	

Communication ports	
Conductor cross-section for copper cable (Cu)	
Rigid 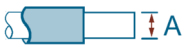	0.14 ... 1.5 mm² [AWG 26 ... 16]
Flexible 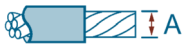	0.14 ... 1.5 mm² [AWG 26 ... 16]
Flexible with end sleeve, without plastic sleeve	0.25 ... 1.0 mm² [AWG 24 ... 18]
Flexible with end sleeve and plastic sleeve	0.25 ... 1.5 mm² [AWG 24 ... 16]
2-wire, same cross-section	
Rigid 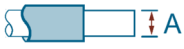	0.14 ... 0.75 mm² [AWG 26 ... 19]
Flexible 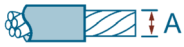	0.14 ... 0.75 mm² [AWG 26 ... 19]
Flexible with end sleeve, without plastic sleeve	0.25 ... 0.5 mm² [AWG 24 ... 20]
Flexible with TWIN end sleeve and plastic sleeve	0.5 ... 1.0 mm² [AWG 20 ... 18]
Tightening torque	0.5 ... 0.6 Nm [4.4 ... 5.3 lb-in]

Dimensions and weights

Dimensions and weights	
Type of fixing	Standard rail mounting TH35 to EN 60715
Construction type	6TE
Housing dimensions W x H x D	108 mm x 97 mm x 71 mm [4.2 in x 3.8 in x 2.8 in]
Weight	
5 A device without packaging	310 g

Dimensions and weights	
5 A device with packaging	375 g
65 A device without packaging	415 g
65 A device with packaging	480 g

Degree of protection and protection class

Degree of protection and protection class	
Protection class	Safety class II
Degree of protection according to IEC 60529	
Front area	IP40
Termination area	IP20
If higher degree of protection requirements are placed on the application engineering, the customer must take suitable measures. This includes installation in a protective enclosure with degree of protection IP51 and higher	

Environmental conditions

Operation is only permissible in a control cabinet or fuse box inside an enclosed dry room.

Environmental conditions		
Temperature range		
	Ambient temperature during operating phase	-25 °C ... +55 °C (K55)
	Ambient temperature during transport and storage	-25 °C ... +70 °C
Relative humidity (annual average value)		< 75 % RH
Installation altitude above sea level		max. 2000 m
Degree of pollution		2
Environmental tests		according to EN 60068-2-27 EN 60068-2-6 EN 60068-3-3
EMC checks		
	interference emission	EN 61326-1 (not MID devices)
		EN 50470-1 (MID devices)
		EN 61000-3-2 (Harmonic currents)
		EN 61000-3-3 (Voltage variations and flicker)
	Limit values complied with for emitted interference	Class B, used in the household sector

Environmental conditions		
	interference immunity	EN61326-1 (not MID devices) (Use in an industrial environment)
		EN 50470-1 (MID devices)
	Standards considered for immunity:	EN 61000-4-2 (Electrostatic discharge)
		EN 61000-4-3 (Electromagnetic HF fields)
		EN 61000-4-4 (Rapid transients - burst)
		EN 61000-4-5 (Surge voltages - surge)
		EN 61000-4-6 (Conducted FH fields)
		EN 61000-4-8 (Magnetic fielder)
		EN 61000-4-1 (Voltage dips)

Electromagnetic environment in accordance with MID directive (2014/32/EU)

- Class E2

Mechanical environment in accordance with MID directive (2014/32/EU)

- Class M1

Relative humidity in relation to ambient temperature

The maximum relative humidity is 80 % at temperatures up to 31 °C, decreasing linearly down to 50 % relative humidity at 40 °C.

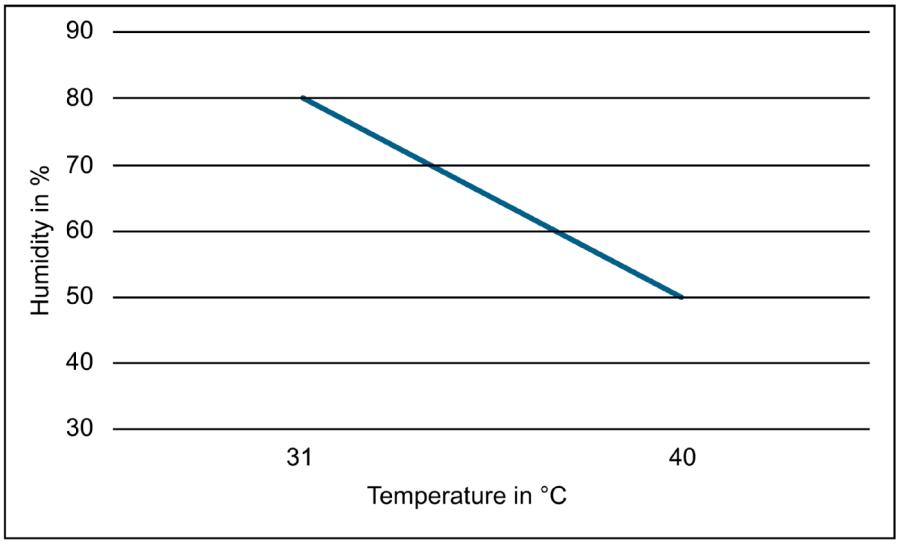

Approvals

The PAC2200 complies with the requirements of the European Directives.

- **CE conformity**

  Applied directives and standards can be found in the EU Declaration of Conformity (https://support.industry.siemens.com/cs/products/7km2200-2ea30-1ca1/pmd-sentron-pac2200-din-rail?pid=760583&dtp=Certificate&mlfb=7KM2200-2EA30-1CA1&mfn=ps&lc=en-WW).

- **Approvals for Australia and New Zealand**

  RCM (Regulatory Compliance Mark)

- **Approval for the Eurasian Economic Union**

- **Approval for Great Britain**

- **MID conformity (optional)**

MYY 1948

Only devices with the following MLFB numbers have MID approval:

7KM2200-2EA30-1GA1

7KM2200-2EA30-1HA1

7KM2200-2EA30-1JA1

7KM2200-2EA40-1GA1

7KM2200-2EA40-1HA1

7KM2200-2EA40-1JA1

As per the Measuring Instruments Directive (MID), Annex 1, Point 10, the following displays and the functions that cause them are within the MID application range and therefore formed part of the conformity assessment procedures according to MID, Annex II, Module B.

Energy for the overall measured values formed from all the existing measuring systems, OBIS code	Short code Energy	Phase angle range of the offset between current and voltage	Revision
Positive active, 1.8.0 T1 + T2 kWh secondary side (menu item kWh IMPORT 11.10)	+A	> 270° to < 90°	0
Negative active, 2.8.0 T1 + T2 kWh secondary side (menu item kWh EXPORT 11.11)	-A	> 90° to < 270°	1

Not included in the application range are in particular:

– Outputs with the exception of the test LED
– Data interfaces (Ethernet) as well as digital inputs and outputs
– Apparent energy
– Reactive energy
– Instantaneous values (voltage, current, apparent power, active power, reactive power, power factors, frequency, totals)
– Switching between tariffs
– Password protection and hardware write protection
– Reset function
– Load profile values (daily, monthly, annual values)
– Calculation of average values for active and reactive power of the last completed demand period for import and export

- Applied directives and standards can be found in the EU Declaration of Conformity (https://support.industry.siemens.com/cs/products/7km2200-2ea30-1ga1/pmd-sentron-pac2200-din-rail?pid=760586&dtp=Certificate&mlfb=7KM2200-2EA30-1GA1&mfn=ps&lc=en-WW).

  You can download the relevant certificates from the Siemens Support website (https://support.industry.siemens.com/cs/products?mfn=ps&lc=en-WW).

- **Approvals for UL and CSA market**

  (only devices without MID)

8.2 Labeling

Labels on the housing of the PAC2200

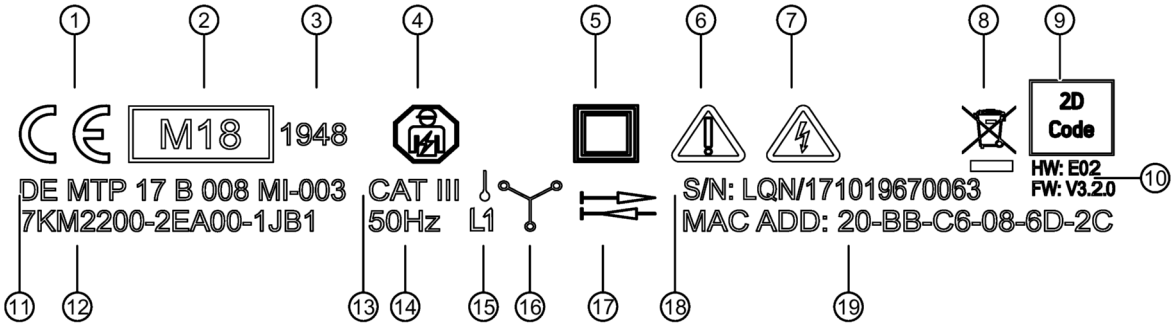

① CE mark
② MID mark with the year it was affixed
③ Number of the notified body
④ Electrical installation and maintenance by qualified personnel only
⑤ Protective insulation - device of class II
⑥ General warning symbol
⑦ Risk of electric shock
⑧ The device must not be disposed of with general domestic waste.
⑨ 2D code (serial number of the device)
⑩ Hardware and firmware version
⑪ Registration number
⑫ Article number
⑬ Overvoltage category CAT III for current and voltage inputs
⑭ Frequency
⑮ Network type (1P2W)
⑯ Network type (3P4W)
⑰ Bidirectional counter
⑱ Serial number of the device
LQN/xxzzzzzzzzzz xx= year of manufacture
⑲ MAC address

Dimensional drawings

9

9.1 Dimensional drawings

Frame dimensions

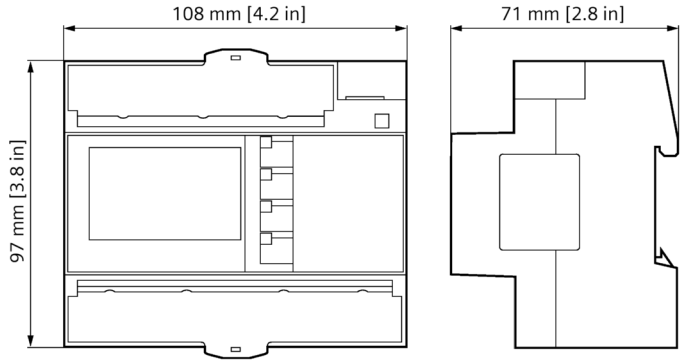

Figure 9-1 Frame dimensions

Appendix A

A.1 Modbus

Detailed information about Modbus can be found at the Modbus Website (http://www.modbus.org)

A.1.1 Function codes

Function codes control the data exchange. In doing so, a function code tells the slave which action it is to take.

If an error occurs, the most significant bit (MSB) is set in the FC byte of the response frame.

Supported Modbus function codes

Table A- 1 Supported Modbus function codes

FC	Function in accordance with Modbus specification
0 x 01	Read Coils
0 x 02	Read Discrete Inputs
0 x 03	Read Holding Registers
0 x 04	Read Input Registers
0 x 05	Write Single Coil
0 x 06	Write Single Register
0 x 0F	Write Multiple Coils
0 x 10	Write Multiple Registers
0 x 2B	Read Device Identification
0 x 14	Read File Record (for mean values)

A.1.2 Modbus exception codes

Overview

Table A- 2 Modbus exception codes

Exception codes	Name	Meaning	Remedy
01	Illegal Function	Illegal function: • The function code in the request is not a permissible action for the slave. • The slave is in a status in which it cannot process a request of this type. This is the case, for example, if it has not yet been configured and is requested to return register values.	Check which function codes are supported.
02	Illegal Data Address	Illegal data address This address is not permissible for the slave. This is the case, for example, if the combination of start offset and transfer length is invalid.	Check the offset and the number of registers.
03	Illegal Data Value	Illegal data value: The request contains a data value that is not permissible for the slave. This indicates an error in the remaining structure of a complex request, e.g. an incorrect data length.	Check that the specified offset and the specified data length in the command are correct.
04	Slave Device Failure	Error in processing the data: An indefinite error occurred when the slave attempted to execute the requested action.	Check that the specified offset and the specified data length are correct.
F0	Write Protection ON	The action has been rejected because the write protection is set.	Deactivate write protection.

A.1.3 Modbus measured variables with the function codes 0x03 and 0x04

Addressing the measured variables

You can use the Modbus function codes 0x03 and 0x04 on all the measured variables listed below.

Note

Error in the case of inconsistent access to measured values

Please ensure the start offset of the register is correct when making **read accesses**.

Please ensure the start offset and the number of registers are correct when making **write accesses**.

Example: If a value consists of two registers, a read command applied in the second register will generate an error code. The PAC2200 will also output an error code if a write operation ends in the middle of a multi-register value.

Table A- 3 Available measured variables

Abbr. in the "Access" column	Abbreviation
R	Read access
W	Write access
RW	Read and write access

Offset	Number of registers	Name	Format	Unit	Value range	Access
1	2	Voltage V_{L1-N}	Float	V	-	R
3	2	Voltage V_{L2-N}	Float	V	-	R
5	2	Voltage V_{L3-N}	Float	V	-	R
7	2	Voltage V_{L1-L2}	Float	V	-	R
9	2	Voltage V_{L2-L3}	Float	V	-	R
11	2	Voltage V_{L3-L1}	Float	V	-	R
13	2	Current L1	Float	A	-	R
15	2	Current L2	Float	A	-	R
17	2	Current L3	Float	A	-	R
19	2	Apparent power L1	Float	VA	-	R
21	2	Apparent power L2	Float	VA	-	R
23	2	Apparent power L3	Float	VA	-	R
25	2	Active power L1	Float	W	-	R
27	2	Active power L2	Float	W	-	R
29	2	Active power L3	Float	W	-	R
31	2	Reactive power L1	Float	var	-	R
33	2	Reactive power L2	Float	var	-	R

Offset	Number of registers	Name	Format	Unit	Value range	Access
35	2	Reactive power L3	Float	var	-	R
37	2	Power factor L1	Float	-	0 ... 1	R
39	2	Power factor L2	Float	-	0 ... 1	R
41	2	Power factor L3	Float	-	0 ... 1	R
55	2	Frequency	Float	Hz	45 ... 65	R
57	2	Average voltage V_{L-N}	Float	V	-	R
59	2	Average voltage V_{L-L}	Float	V	-	R
61	2	Average Current	Float	A	-	R
63	2	Total apparent power	Float	VA	-	R
65	2	Total active power	Float	W	-	R
67	2	Total reactive power	Float	var	-	R
69	2	Total power factor	Float	-	-	R
71	2	Neutral Current	Float	A	-	R
205	2	Device diagnostics and device status	Unsigned long	-	Byte0 = global state Byte1 = local state Byte2 = global diag.	R
207	2	Status of the digital outputs	Unsigned long	-	Byte Bit 0 = Output 0	R
209	2	Status of the digital inputs	Unsigned long	-	Byte 3 Bit 0 = Input 0	R
211	2	Active tariff	Unsigned long	-	0 = Tariff 1 1 = Tariff 2	R
215	2	Universal counter	Unsigned long	-	0 ... 999999999	RW
217	2	Relevant parameter changes counter	Unsigned long	-	-	R
219	2	Counter all parameter changes	Unsigned long	-	-	R
231	2	Configurable energy counter	Float	kWh, kvarh	-	R
265	2	Daily profile counter	Unsigned long	-	-	R
267	2	Monthly profile counter	Unsigned long	-	-	R
269	2	Annual profile counter	Unsigned long	-	-	R
501	2	Cumulated average active power import	Float	W	-	R
503	2	Cumulated average reactive power import	Float	var	-	R
505	2	Cumulated average active power export	Float	W	-	R
507	2	Cumulated average reactive power export	Float	var	-	R
509	2	Maximum active power reading during the period	Float	W	-	R
511	2	Minimum active power reading during the period	Float	W	-	R
513	2	Maximum reactive power reading during the period	Float	var	-	R
515	2	Minimum reactive power reading during the period	Float	var	-	R
517	2	Length of the current measuring period	Unsigned long	s	-	R

Offset	Number of registers	Name	Format	Unit	Value range	Access
519	2	Time Since Start of the active demand period	Unsigned long	s	-	R
545	2	Time stamp current period (UTC)	Unix_ts	-	-	R
547	2	OID for the current period	Unsigned long	-	-	R
549	2	Active energy - import current period	Float	Wh	-	R
551	2	Reactive energy - import current period	Float	varh	-	R
553	2	Active energy - export current period	Float	Wh	-	R
555	2	Reactive energy - export current period	Float	varh	-	R
557	2	Length of the load profile period	Unsigned long	ms	-	R
559	2	Inform. flag bytes current period	Unsigned long	-	-	R
561	4	Total active energy - import tariff 1, current period	Double	Wh	-	R
565	4	Total active energy - import tariff 2, current period	Double	Wh	-	R
569	4	Total reactive energy - import tariff 1, current period	Double	varh	-	R
573	4	Total reactive energy - import tariff 2, current period	Double	varh	-	R
577	4	Total active energy - export tariff 1, current period	Double	Wh	-	R
581	4	Total active energy - export tariff 2, current period	Double	Wh	-	R
585	4	Total reactive energy - export tariff 1, current period	Double	varh	-	R
589	4	Total reactive energy - export tariff 2, current period	Double	varh	-	R
593	4	Total active energy - import tariff 1 + 2, current period	Double	varh	-	R
597	4	Total active energy - export tariff 1 + 2, current period	Double	Wh	-	R
799	2	Date/time	Unix_ts	-	-	RW
801	4	Active energy import tariff 1	Double	Wh	Overflow 1.0e+12	R
805	4	Active energy import tariff 2	Double	Wh	Overflow 1.0e+12	R
809	4	Active energy export tariff 1	Double	Wh	Overflow 1.0e+12	R
813	4	Active energy export tariff 2	Double	Wh	Overflow 1.0e+12	R
817	4	Reactive energy import tariff 1	Double	varh	Overflow 1.0e+12	R
821	4	Reactive energy import tariff 2	Double	varh	Overflow 1.0e+12	R
825	4	Reactive energy export tariff 1	Double	varh	Overflow 1.0e+12	R
829	4	Reactive energy export tariff 2	Double	varh	Overflow 1.0e+12	R
833	4	Apparent energy tariff 1	Double	VAh	Overflow 1.0e+12	R
837	4	Apparent energy tariff 2	Double	VAh	Overflow 1.0e+12	R
841	4	L1 active energy import tariff 1	Double	Wh	Overflow 1.0e+12	R
845	4	L1 active energy import tariff 2	Double	Wh	Overflow 1.0e+12	R
849	4	L1 active energy export tariff 1	Double	Wh	Overflow 1.0e+12	R
853	4	L1 active energy export tariff 2	Double	Wh	Overflow 1.0e+12	R
857	4	L1 reactive energy import tariff 1	Double	varh	Overflow 1.0e+12	R
861	4	L1 reactive energy import tariff 2	Double	varh	Overflow 1.0e+12	R

Offset	Number of registers	Name	Format	Unit	Value range	Access
865	4	L1 reactive energy export tariff 1	Double	varh	Overflow 1.0e+12	R
869	4	L1 reactive energy export tariff 2	Double	varh	Overflow 1.0e+12	R
873	4	L1 apparent energy tariff 1	Double	VAh	Overflow 1.0e+12	R
877	4	L1 apparent energy tariff 2	Double	VAh	Overflow 1.0e+12	R
881	4	L2 active energy import tariff 1	Double	Wh	Overflow 1.0e+12	R
885	4	L2 active energy import tariff 2	Double	Wh	Overflow 1.0e+12	R
889	4	L2 active energy export tariff 1	Double	Wh	Overflow 1.0e+12	R
893	4	L2 active energy export tariff 2	Double	Wh	Overflow 1.0e+12	R
897	4	L2 reactive energy import tariff 1	Double	varh	Overflow 1.0e+12	R
901	4	L2 reactive energy import tariff 2	Double	varh	Overflow 1.0e+12	R
905	4	L2 reactive energy export tariff 1	Double	varh	Overflow 1.0e+12	R
909	4	L2 reactive energy export tariff 2	Double	varh	Overflow 1.0e+12	R
913	4	L2 apparent energy tariff 1	Double	VAh	Overflow 1.0e+12	R
917	4	L2 apparent energy tariff 2	Double	VAh	Overflow 1.0e+12	R
921	4	L3 active energy import tariff 1	Double	Wh	Overflow 1.0e+12	R
925	4	L3 active energy import tariff 2	Double	Wh	Overflow 1.0e+12	R
929	4	L3 active energy export tariff 1	Double	Wh	Overflow 1.0e+12	R
933	4	L3 active energy export tariff 2	Double	Wh	Overflow 1.0e+12	R
937	4	L3 reactive energy import tariff 1	Double	varh	Overflow 1.0e+12	R
941	4	L3 reactive energy import tariff 2	Double	varh	Overflow 1.0e+12	R
945	4	L3 reactive energy export tariff 1	Double	varh	Overflow 1.0e+12	R
949	4	L3 reactive energy export tariff 2	Double	varh	Overflow 1.0e+12	R
953	4	L3 apparent energy tariff 1	Double	VAh	Overflow 1.0e+12	R
957	4	L3 apparent energy tariff 2	Double	VAh	Overflow 1.0e+12	R
961	4	Secondary total of active energy - import (MID register)	Double	Wh	-	R
965	4	Secondary total of active energy - export (MID register)	Double	Wh	-	R
2801	2	Total active energy - import tariff 1	float	Wh	overflow 1.0e+12	R
2803	2	Total active energy - import tariff 2	float	Wh	overflow 1.0e+12	R
2805	2	Total active energy - export tariff 1	float	varh	overflow 1.0e+12	R
2807	2	Total active energy - export tariff 2	float	varh	overflow 1.0e+12	R
2809	2	Total reactive energy - import tariff 1	float	Wh	overflow 1.0e+12	R
2811	2	Total reactive energy - import tariff 2	float	Wh	overflow 1.0e+12	R
2813	2	Total reactive energy - export tariff 1	float	varh	overflow 1.0e+12	R
2815	2	Total reactive energy - export tariff 2	float	varh	overflow 1.0e+12	R
2817	2	Total apparent energy - tariff 1	float	VAh	overflow 1.0e+12	R
2819	2	Total apparent energy - tariff 2	float	VAh	overflow 1.0e+12	R
2821	2	L1 active energy - import tariff 1	float	Wh	overflow 1.0e+12	R
2823	2	L1 active energy - import tariff 2	float	Wh	overflow 1.0e+12	R
2825	2	L1 active energy - export tariff 1	float	varh	overflow 1.0e+12	R
2827	2	L1 active energy - export tariff 2	float	varh	overflow 1.0e+12	R
2829	2	L1 reactive energy - import tariff 1	float	Wh	overflow 1.0e+12	R
2831	2	L1 reactive energy - import tariff 2	float	Wh	overflow 1.0e+12	R

Offset	Number of registers	Name	Format	Unit	Value range	Access
2833	2	L1 reactive energy - export tariff 1	float	varh	overflow 1.0e+12	R
2835	2	L1 reactive energy - export tariff 2	float	varh	overflow 1.0e+12	R
2837	2	L1 apparent energy - tariff 1	float	VAh	overflow 1.0e+12	R
2839	2	L1 apparent energy - tariff 2	float	VAh	overflow 1.0e+12	R
2841	2	L2 active energy - import tariff 1	float	Wh	overflow 1.0e+12	R
2843	2	L2 active energy - import tariff 2	float	Wh	overflow 1.0e+12	R
2845	2	L2 active energy - export tariff 1	float	varh	overflow 1.0e+12	R
2847	2	L2 active energy - export tariff 2	float	varh	overflow 1.0e+12	R
2849	2	L2 reactive energy - import tariff 1	float	Wh	overflow 1.0e+12	R
2851	2	L2 reactive energy - import tariff 2	float	Wh	overflow 1.0e+12	R
2853	2	L2 reactive energy - export tariff 1	float	varh	overflow 1.0e+12	R
2855	2	L2 reactive energy - export tariff 2	float	varh	overflow 1.0e+12	R
2857	2	L2 apparent energy - tariff 1	float	VAh	overflow 1.0e+12	R
2859	2	L2 apparent energy - tariff 2	float	VAh	overflow 1.0e+12	R
2861	2	L3 active energy - import tariff 1	float	Wh	overflow 1.0e+12	R
2863	2	L3 active energy - import tariff 2	float	Wh	overflow 1.0e+12	R
2865	2	L3 active energy - export tariff 1	float	varh	overflow 1.0e+12	R
2867	2	L3 active energy - export tariff 2	float	varh	overflow 1.0e+12	R
2869	2	L3 reactive energy - import tariff 1	float	Wh	overflow 1.0e+12	R
2871	2	L3 reactive energy - import tariff 2	float	Wh	overflow 1.0e+12	R
2873	2	L3 reactive energy - export tariff 1	float	varh	overflow 1.0e+12	R
2875	2	L3 reactive energy - export tariff 2	float	varh	overflow 1.0e+12	R
2877	2	L3 apparent energy - tariff 1	float	VAh	overflow 1.0e+12	R
2879	2	L3 apparent energy - tariff 2	float	VAh	overflow 1.0e+12	R
2881	2	Secondary total of active energy - import (MID register)	float	Wh	overflow 1.0e+12	R
2883	2	Secondary total of active energy - export (MID register)	float	Wh	overflow 1.0e+12	R

A.1.4 Modbus-measured variables with function code "0x14"

Addressing the measured variables

The measured variables listed below can be read out via Modbus function code 0x14 "Read File Record" in two steps.

Step 1 (File Number 1), preset to 10 s

Step 2 (File Number 2), preset to 15 min

Note

Error in the case of inconsistent access to measured values

Please ensure the start offset of the register is correct when making **read accesses**.

Please ensure the start offset and the number of registers are correct when making **write accesses**.

Example: If a value consists of two registers, a read command applied in the second register will generate an error code. The PAC2200 will also output an error code if a write operation ends in the middle of a multi-register value.

Abbr. in the "Access" column	Abbreviations
R	Read access
W	Write access
RW	Read and write access

File (FC0x14)	Offset address	Address FC0x03 FC0x04	Number of registers	Name	Format	Unit	Value range	Access
1	1	30001	2	Time stamp	unix_ts	-		R
1	3	30003	2	Flags	uint32_t	-	0= UNFLAGGED 1= FLAGGED 2= SAG 4= SWELL 8= POWER FAIL	R
1	5	30005	2	Voltage L1 - N	float	V		R
1	7	30007	2	Voltage L2 - N	float	V		R
1	9	30009	2	Voltage L3 - N	float	V		R
1	11	30011	2	Voltage L1 - L2	float	V		R
1	13	30013	2	Voltage L2 - L3	float	V		R
1	15	30015	2	Voltage L3 - L1	float	V		R
1	17	30017	2	Current L1	float	A		R
1	19	30019	2	Current L2	float	A		R
1	21	30021	2	Current L3	float	A		R
1	23	30023	2	Apparent power L1	float	VA		R

File (FC0x14)	Off-set addr ess	Address FC0x03 FC0x04	Num-ber of regis-ters	Name	Format	Unit	Value range	Ac-cess
1	25	30025	2	Apparent power L2	float	VA		R
1	27	30027	2	Apparent power L3	float	VA		R
1	29	30029	2	Active power L1	float	W		R
1	31	30031	2	Active power L2	float	W		R
1	33	30033	2	Active power L3	float	W		R
1	35	30035	2	Reactive power L1	float	var		R
1	37	30037	2	Reactive power L2	float	var		R
1	39	30039	2	Reactive power L3	float	var		R
1	41	30041	2	Power factor L1	float	-		R
1	43	30043	2	Power factor L2	float	-		R
1	45	30045	2	Power factor L3	float	-		R
1	47	30047	2	Frequency	float	Hz		R
1	49	30049	2	Average voltage L - N	float	V		R
1	51	30051	2	Average voltage L - L	float	V		R
1	53	30053	2	Average current	float	A		R
1	55	30055	2	Total apparent power	float	VA		R
1	57	30057	2	Total active power	float	W		R
1	59	30059	2	Total reactive power	float	var		R
1	61	30061	2	Total power factor	float	-		R
1	63	30063	2	Neutral Current I_N	float	-		R
1	257	30257	2	Time stamp	unix_ts	-		R
1	259	30259	2	Flags	uint32_t	-	0= UNFLAGGED 1= FLAGGED 2= SAG 4= SWELL 8= POWER FAIL	R
1	261	30261	2	Maximum voltage L1 - N	float	V		R
1	263	30263	2	Maximum voltage L2 - N	float	V		R
1	265	30265	2	Maximum voltage L3 - N	float	V		R
1	267	30267	2	Maximum voltage L1 - L2	float	V	R	R
1	269	30269	2	Maximum voltage L2 - L3	float	V	R	R
1	271	30271	2	Maximum voltage L3 - L1	float	V	R	R
1	273	30273	2	Maximum current L1	float	A	R	R
1	275	30275	2	Maximum current L2	float	A	R	R
1	277	30277	2	Maximum current L3	float	A	R	R
1	279	30279	2	Maximum apparent power L1	float	VA	R	R
1	281	30281	2	Maximum apparent power L2	float	VA	R	R
1	283	30283	2	Maximum apparent power L3	float	VA	R	R
1	285	30285	2	Maximum active power L1	float	W	R	R
1	287	30287	2	Maximum active power L2	float	W	R	R
1	289	30289	2	Maximum active power L3	float	W	R	R

File (FC0x14)	Off-set addr ess	Address FC0x03 FC0x04	Num-ber of regis-ters	Name	Format	Unit	Value range	Ac-cess
1	291	30291	2	Maximum reactive power L1	float	var	R	R
1	293	30293	2	Maximum reactive power L2	float	var	R	R
1	295	30295	2	Maximum reactive power L3	float	var	R	R
1	297	30297	2	Maximum power factor L1	float	-	R	R
1	299	30299	2	Maximum power factor L2	float	-	R	R
1	301	30301	2	Maximum power factor L3	float	-	R	R
1	303	30303	2	Maximum frequency	float	Hz	R	R
1	305	30305	2	Maximum average voltage L - N	float	V	R	R
1	307	30307	2	Maximum average voltage L - L	float	V	R	R
1	309	30309	2	Maximum average current	float	A	R	R
1	311	30311	2	Maximum total apparent power	float	VA	R	R
1	313	30313	2	Maximum total active power	float	W	R	R
1	315	30315	2	Maximum total reactive power	float	var	R	R
1	317	30317	2	Maximum total power factor	float	-	R	R
1	319	30319	2	max. neutral current I_N	float	-	R	R
1	513	30513	2	Time stamp	unix_ts	-		R
1	515	30515	2	Flags	uint32_t	-	0= UNFLAGGED 1= FLAGGED 2= SAG 4= SWELL 8= POWER FAIL	R
1	517	30517	2	Minimum voltage L1 - N	float	V	R	R
1	519	30519	2	Minimum voltage L2 - N	float	V	R	R
1	521	30521	2	Minimum voltage L3 - N	float	V	R	R
1	523	30523	2	Minimum voltage L1 - L2	float	V	R	R
1	525	30525	2	Minimum voltage L2 - L3	float	V	R	R
1	527	30527	2	Minimum voltage L3 - L1	float	V	R	R
1	529	30529	2	Minimum current L1	float	A	R	R
1	531	30531	2	Minimum current L2	float	A	R	R
1	533	30533	2	Minimum current L3	float	A	R	R
1	535	30535	2	Minimum apparent power L1	float	VA	R	R
1	537	30537	2	Minimum apparent power L2	float	VA	R	R
1	539	30539	2	Minimum apparent power L3	float	VA	R	R
1	541	30541	2	Minimum active power L1	float	W	R	R
1	543	30534	2	Minimum active power L2	float	W	R	R
1	545	30545	2	Minimum active power L3	float	W	R	R
1	547	30547	2	Minimum reactive power L1	float	var	R	R
1	549	30549	2	Minimum reactive power L2	float	var	R	R
1	551	30551	2	Minimum reactive power L3	float	var	R	R
1	553	30553	2	Minimum power factor L1	float	-	R	R

File (FC0x14)	Off-set addr ess	Address FC0x03 FC0x04	Num-ber of regis-ters	Name	Format	Unit	Value range	Ac-cess
1	555	30555	2	Minimum power factor L2	float	-	R	R
1	557	30557	2	Minimum power factor L3	float	-	R	R
1	559	30559	2	Minimum frequency	float	Hz	R	R
1	561	30561	2	Minimum average voltage L - N	float	V	R	R
1	563	30563	2	Minimum average voltage L - L	float	V	R	R
1	565	30565	2	Minimum average current	float	A	R	R
1	567	30567	2	Minimum total apparent power	float	VA	R	R
1	569	30569	2	Minimum total active power	float	W	R	R
1	571	30571	2	Minimum total reactive power	float	var	R	R
1	573	30573	2	Minimum total power factor	float	-	R	R
1	575	30575	2	min. neutral current I_N	float	-	R	R

File (FC0x14)	Off-set addr ess	Address FC0x03 FC0x04	Num-ber of regis-ters	Name	Format	Unit	Value range	Ac-cess
2	1	31001	2	Time stamp	unix_ts	-		R
2	3	31003	2	Flags	uint32_t	-	0= UNFLAGGED 1= FLAGGED 2= SAG 4= SWELL 8= POWER FAIL	R
2	5	31005	2	Voltage L1 - N	float	V		R
2	7	31007	2	Voltage L2 - N	float	V		R
2	9	31009	2	Voltage L3 - N	float	V		R
2	11	31011	2	Voltage L1 - L2	float	V		R
2	13	31013	2	Voltage L2 - L3	float	V		R
2	15	31015	2	Voltage L3 - L1	float	V		R
2	17	31017	2	Current L1	float	A		R
2	19	31019	2	Current L2	float	A		R
2	21	31021	2	Current L3	float	A		R
2	23	31023	2	Apparent power L1	float	VA		R
2	25	31025	2	Apparent power L2	float	VA		R
2	27	31027	2	Apparent power L3	float	VA		R
2	29	31029	2	Active power L1	float	W		R
2	31	31031	2	Active power L2	float	W		R
2	33	31033	2	Active power L3	float	W		R
2	35	31035	2	Reactive power L1	float	var		R
2	37	31037	2	Reactive power L2	float	var		R

File (FC0x14)	Off-set addr ess	Address FC0x03 FC0x04	Num-ber of regis-ters	Name	Format	Unit	Value range	Ac-cess
2	39	31039	2	Reactive power L3	float	var		R
2	41	31041	2	Power factor L1	float	-		R
2	43	31043	2	Power factor L2	float	-		R
2	45	31045	2	Power factor L3	float	-		R
2	47	31047	2	Frequency	float	Hz		R
2	49	31049	2	Average voltage L - N	float	V		R
2	51	31051	2	Average voltage L - L	float	V		R
2	53	31053	2	Average current	float	A		R
2	55	31055	2	Total apparent power	float	VA		R
2	57	31057	2	Total active power	float	W		R
2	59	31059	2	Total reactive power	float	var		R
2	61	31061	2	Total power factor	float	-		R
2	63	31063	2	Neutral Current I_N	float	-		R
2	257	31257	2	Time stamp	unix_ts	-		R
2	259	31259	2	Flags	uint32_t	-	0= UNFLAGGED 1= FLAGGED 2= SAG 4= SWELL 8= POWER FAIL	R
2	261	31261	2	Maximum voltage L1 - N	float	V		R
2	263	31263	2	Maximum voltage L2 - N	float	V		R
2	265	31265	2	Maximum voltage L3 - N	float	V		R
2	267	31267	2	Maximum voltage L1 - L2	float	V	R	R
2	269	31269	2	Maximum voltage L2 - L3	float	V	R	R
2	271	31271	2	Maximum voltage L3 - L1	float	V	R	R
2	273	31273	2	Maximum current L1	float	A	R	R
2	275	31275	2	Maximum current L2	float	A	R	R
2	277	31277	2	Maximum current L3	float	A	R	R
2	279	31279	2	Maximum apparent power L1	float	VA	R	R
2	281	31281	2	Maximum apparent power L2	float	VA	R	R
2	283	31283	2	Maximum apparent power L3	float	VA	R	R
2	285	31285	2	Maximum active power L1	float	W	R	R
2	287	31287	2	Maximum active power L2	float	W	R	R
2	289	31289	2	Maximum active power L3	float	W	R	R
2	291	31291	2	Maximum reactive power L1	float	var	R	R
2	293	31293	2	Maximum reactive power L2	float	var	R	R
2	295	31295	2	Maximum reactive power L3	float	var	R	R
2	297	31297	2	Maximum power factor L1	float	-	R	R
2	299	31299	2	Maximum power factor L2	float	-	R	R
2	301	31301	2	Maximum power factor L3	float	-	R	R
2	303	31303	2	Maximum frequency	float	Hz	R	R

File (FC0x14)	Off-set addr ess	Address FC0x03 FC0x04	Num-ber of regis-ters	Name	Format	Unit	Value range	Ac-cess
2	305	31305	2	Maximum average voltage L - N	float	V	R	R
2	307	31307	2	Maximum average voltage L - L	float	V	R	R
2	309	31309	2	Maximum average current	float	A	R	R
2	311	31311	2	Maximum total apparent power	float	VA	R	R
2	313	31313	2	Maximum total active power	float	W	R	R
2	315	31315	2	Maximum total reactive power	float	var	R	R
2	317	31317	2	Maximum total power factor	float	-	R	R
2	319	31319	2	max. neutral current I_N	float	-	R	R
2	513	31513	2	Time stamp	unix_ts	-		R
2	515	31515	2	Flags	uint32_t	-	0= UNFLAGGED 1= FLAGGED 2= SAG 4= SWELL 8= POWER FAIL	R
2	517	31517	2	Minimum voltage L1 - N	float	V	R	R
2	519	31519	2	Minimum voltage L2 - N	float	V	R	R
2	521	31521	2	Minimum voltage L3 - N	float	V	R	R
2	523	31523	2	Minimum voltage L1 - L2	float	V	R	R
2	525	31525	2	Minimum voltage L2 - L3	float	V	R	R
2	527	31527	2	Minimum voltage L3 - L1	float	V	R	R
2	529	31529	2	Minimum current L1	float	A	R	R
2	531	31531	2	Minimum current L2	float	A	R	R
2	533	31533	2	Minimum current L3	float	A	R	R
2	535	31535	2	Minimum apparent power L1	float	VA	R	R
2	537	31537	2	Minimum apparent power L2	float	VA	R	R
2	539	31539	2	Minimum apparent power L3	float	VA	R	R
2	541	31541	2	Minimum active power L1	float	W	R	R
2	543	31534	2	Minimum active power L2	float	W	R	R
2	545	31545	2	Minimum active power L3	float	W	R	R
2	547	31547	2	Minimum reactive power L1	float	var	R	R
2	549	31549	2	Minimum reactive power L2	float	var	R	R
2	551	31551	2	Minimum reactive power L3	float	var	R	R
2	553	31553	2	Minimum power factor L1	float	-	R	R
2	555	31555	2	Minimum power factor L2	float	-	R	R
2	557	31557	2	Minimum power factor L3	float	-	R	R
2	559	31559	2	Minimum frequency	float	Hz	R	R
2	561	31561	2	Minimum average voltage L - N	float	V	R	R
2	563	31563	2	Minimum average voltage L - L	float	V	R	R
2	565	31565	2	Minimum average current	float	A	R	R

File (FC0x14)	Off-set addr ess	Address FC0x03 FC0x04	Num-ber of regis-ters	Name	Format	Unit	Value range	Ac-cess
2	567	31567	2	Minimum total apparent power	float	VA	R	R
2	569	31569	2	Minimum total active power	float	W	R	R
2	571	31571	2	Minimum total reactive power	float	var	R	R
2	573	31573	2	Minimum total power factor	float	-	R	R
2	575	31575	2	min. neutral current I_N	float	-	R	R

A.1.5 Active energy history with Modbus function code 0x14

The active energy counters listed below can be read out via Modbus function code 0x14 "Read File Record".

- The daily energy counter (file number 90) records the active energy for each day of the preceding two months.
- The monthly energy counter (file number 91) records the active energy for each month of the preceding two years.

File (FC0x14)	Offset address	Address FC0x03 FC0x04	Length	Name	Format	Ac-cess
90	1	32001	2	Error state	Bool	R
90	3	32003	2	TS actual period	UNIX_TS (UTC)	R
90	5	32005	2	Work portion today Tariff 1	Float	R
90	7	32007	2	Work portion today Tariff 2	Float	R
90	9	32009	2	TS of day – 1	UNIX_TS (UTC)	R
90	11	32011	2	Work portion Tariff 1	Float	R
90	13	32013	2	Work portion Tariff 2	Float	R
90	15	32015	2	TS of day – 2	UNIX_TS (UTC)	R
90	17	32017	2	Work portion Tariff 1	Float	R
90	19	32019	2	Work portion Tariff 2	Float	R
90	21	32021	2	TS of day – 3	UNIX_TS (UTC)	R
90	23	32023	2	Work portion Tariff 1	Float	R
90	25	32025	2	Work portion Tariff 2	Float	R
90	27	32027	2	TS of day – 4	UNIX_TS (UTC)	R
90	29	32029	2	Work portion Tariff 1	Float	R
90	31	32031	2	Work portion Tariff 2	Float	R
90	33	32033	2	TS of day – 5	UNIX_TS (UTC)	R
90	35	32035	2	Work portion Tariff 1	Float	R
90	37	32037	2	Work portion Tariff 2	Float	R
90	39	32039	2	TS of day – 6	UNIX_TS (UTC)	R
90	41	32041	2	Work portion Tariff 1	Float	R

File (FC0x14)	Offset address	Address FC0x03 FC0x04	Length	Name	Format	Access
90	43	32043	2	Work portion Tariff 2	Float	R
90	45	32045	2	TS of day – 7	UNIX_TS (UTC)	R
90	47	32047	2	Work portion Tariff 1	Float	R
90	49	32049	2	Work portion Tariff 2	Float	R
90	51	32051	2	TS of day – 8	UNIX_TS (UTC)	R
90	53	32053	2	Work portion Tariff 1	Float	R
90	55	32055	2	Work portion Tariff 2	Float	R
90	57	32057	2	TS of day – 9	UNIX_TS (UTC)	R
90	59	32059	2	Work portion Tariff 1	Float	R
90	61	32061	2	Work portion Tariff 2	Float	R
90	63	32063	2	TS of day – 10	UNIX_TS (UTC)	R
90	65	32065	2	Work portion Tariff 1	Float	R
90	67	32067	2	Work portion Tariff 2	Float	R
90	69	32069	2	TS of day – 11	UNIX_TS (UTC)	R
90	71	32071	2	Work portion Tariff 1	Float	R
90	73	32073	2	Work portion Tariff 2	Float	R
90	75	32075	2	TS of day – 12	UNIX_TS (UTC)	R
90	77	32077	2	Work portion Tariff 1	Float	R
90	79	32079	2	Work portion Tariff 2	Float	R
90	81	32081	2	TS of day – 13	UNIX_TS (UTC)	R
90	83	32083	2	Work portion Tariff 1	Float	R
90	85	32085	2	Work portion Tariff 2	Float	R
90	87	32087	2	TS of day – 14	UNIX_TS (UTC)	R
90	89	32089	2	Work portion Tariff 1	Float	R
90	91	32091	2	Work portion Tariff 2	Float	R
90	93	32093	2	TS of day – 15	UNIX_TS (UTC)	R
90	95	32095	2	Work portion Tariff 1	Float	R
90	97	32097	2	Work portion Tariff 2	Float	R
90	99	32099	2	TS of day – 16	UNIX_TS (UTC)	R
90	101	32101	2	Work portion Tariff 1	Float	R
90	103	32103	2	Work portion Tariff 2	Float	R
90	105	32105	2	TS of day – 17	UNIX_TS (UTC)	R
90	107	32107	2	Work portion Tariff 1	Float	R
90	109	32109	2	Work portion Tariff 2	Float	R
90	111	32111	2	TS of day – 18	UNIX_TS (UTC)	R
90	113	32113	2	Work portion Tariff 1	Float	R
90	115	32115	2	Work portion Tariff 2	Float	R
90	117	32117	2	TS of day – 19	UNIX_TS (UTC)	R
90	119	32119	2	Work portion Tariff 1	Float	R
90	121	32121	2	Work portion Tariff 2	Float	R
90	123	32123	2	TS of day – 20	UNIX_TS (UTC)	R
90	125	32125	2	Work portion Tariff 1	Float	R
90	127	32127	2	Work portion Tariff 2	Float	R

File (FC0x14)	Offset address	Address FC0x03 FC0x04	Length	Name	Format	Access
90	129	32129	2	TS of day – 21	UNIX_TS (UTC)	R
90	131	32131	2	Work portion Tariff 1	Float	R
90	133	32133	2	Work portion Tariff 2	Float	R
90	135	32135	2	TS of day – 22	UNIX_TS (UTC)	R
90	137	32137	2	Work portion Tariff 1	Float	R
90	139	32139	2	Work portion Tariff 2	Float	R
90	141	32141	2	TS of day – 23	UNIX_TS (UTC)	R
90	143	32143	2	Work portion Tariff 1	Float	R
90	145	32145	2	Work portion Tariff 2	Float	R
90	147	32147	2	TS of day – 24	UNIX_TS (UTC)	R
90	149	32149	2	Work portion Tariff 1	Float	R
90	151	32151	2	Work portion Tariff 2	Float	R
90	153	32153	2	TS of day – 25	UNIX_TS (UTC)	R
90	155	32155	2	Work portion Tariff 1	Float	R
90	157	32157	2	Work portion Tariff 2	Float	R
90	159	32159	2	TS of day – 26	UNIX_TS (UTC)	R
90	161	32161	2	Work portion Tariff 1	Float	R
90	163	32163	2	Work portion Tariff 2	Float	R
90	165	32165	2	TS of day – 27	UNIX_TS (UTC)	R
90	167	32167	2	Work portion Tariff 1	Float	R
90	169	32169	2	Work portion Tariff 2	Float	R
90	171	32171	2	TS of day – 28	UNIX_TS (UTC)	R
90	173	32173	2	Work portion Tariff 1	Float	R
90	175	32175	2	Work portion Tariff 2	Float	R
90	177	32177	2	TS of day – 29	UNIX_TS (UTC)	R
90	179	32179	2	Work portion Tariff 1	Float	R
90	181	32181	2	Work portion Tariff 2	Float	R
90	183	32183	2	TS of day – 30	UNIX_TS (UTC)	R
90	185	32185	2	Work portion Tariff 1	Float	R
90	187	32187	2	Work portion Tariff 2	Float	R
90	189	32189	2	TS of day – 31	UNIX_TS (UTC)	R
90	191	32191	2	Work portion Tariff 1	Float	R
90	193	32193	2	Work portion Tariff 2	Float	R
90	195	32195	2	TS of day – 32	UNIX_TS (UTC)	R
90	197	32197	2	Work portion Tariff 1	Float	R
90	199	32199	2	Work portion Tariff 2	Float	R
90	201	32201	2	TS of day – 33	UNIX_TS (UTC)	R
90	203	32203	2	Work portion Tariff 1	Float	R
90	205	32205	2	Work portion Tariff 2	Float	R
90	207	32207	2	TS of day – 34	UNIX_TS (UTC)	R
90	209	32209	2	Work portion Tariff 1	Float	R
90	211	32211	2	Work portion Tariff 2	Float	R
90	213	32213	2	TS of day – 35	UNIX_TS (UTC)	R

File (FC0x14)	Offset address	Address FC0x03 FC0x04	Length	Name	Format	Access
90	215	32215	2	Work portion Tariff 1	Float	R
90	217	32217	2	Work portion Tariff 2	Float	R
90	219	32219	2	TS of day – 36	UNIX_TS (UTC)	R
90	221	32221	2	Work portion Tariff 1	Float	R
90	223	32223	2	Work portion Tariff 2	Float	R
90	225	32225	2	TS of day – 37	UNIX_TS (UTC)	R
90	227	32227	2	Work portion Tariff 1	Float	R
90	229	32229	2	Work portion Tariff 2	Float	R
90	231	32231	2	TS of day – 38	UNIX_TS (UTC)	R
90	233	32233	2	Work portion Tariff 1	Float	R
90	235	32235	2	Work portion Tariff 2	Float	R
90	237	32237	2	TS of day – 39	UNIX_TS (UTC)	R
90	239	32239	2	Work portion Tariff 1	Float	R
90	241	32241	2	Work portion Tariff 2	Float	R
90	243	32243	2	TS of day – 40	UNIX_TS (UTC)	R
90	245	32245	2	Work portion Tariff 1	Float	R
90	247	32247	2	Work portion Tariff 2	Float	R
90	249	32249	2	TS of day – 41	UNIX_TS (UTC)	R
90	251	32251	2	Work portion Tariff 1	Float	R
90	253	32253	2	Work portion Tariff 2	Float	R
90	255	32255	2	TS of day – 42	UNIX_TS (UTC)	R
90	257	32257	2	Work portion Tariff 1	Float	R
90	259	32259	2	Work portion Tariff 2	Float	R
90	261	32261	2	TS of day – 43	UNIX_TS (UTC)	R
90	263	32263	2	Work portion Tariff 1	Float	R
90	265	32265	2	Work portion Tariff 2	Float	R
90	267	32267	2	TS of day – 44	UNIX_TS (UTC)	R
90	269	32269	2	Work portion Tariff 1	Float	R
90	271	32271	2	Work portion Tariff 2	Float	R
90	273	32273	2	TS of day – 45	UNIX_TS (UTC)	R
90	275	32275	2	Work portion Tariff 1	Float	R
90	277	32277	2	Work portion Tariff 2	Float	R
90	279	32279	2	TS of day – 46	UNIX_TS (UTC)	R
90	281	32281	2	Work portion Tariff 1	Float	R
90	283	32283	2	Work portion Tariff 2	Float	R
90	285	32285	2	TS of day – 47	UNIX_TS (UTC)	R
90	287	32287	2	Work portion Tariff 1	Float	R
90	289	32289	2	Work portion Tariff 2	Float	R
90	291	32291	2	TS of day – 48	UNIX_TS (UTC)	R
90	293	32293	2	Work portion Tariff 1	Float	R
90	295	32295	2	Work portion Tariff 2	Float	R
90	297	32297	2	TS of day – 49	UNIX_TS (UTC)	R
90	299	32299	2	Work portion Tariff 1	Float	R

File (FC0x14)	Offset address	Address FC0x03 FC0x04	Length	Name	Format	Access
90	301	32301	2	Work portion Tariff 2	Float	R
90	303	32303	2	TS of day – 50	UNIX_TS (UTC)	R
90	305	32305	2	Work portion Tariff 1	Float	R
90	307	32307	2	Work portion Tariff 2	Float	R
90	309	32309	2	TS of day – 51	UNIX_TS (UTC)	R
90	311	32311	2	Work portion Tariff 1	Float	R
90	313	32313	2	Work portion Tariff 2	Float	R
90	315	32315	2	TS of day – 52	UNIX_TS (UTC)	R
90	317	32317	2	Work portion Tariff 1	Float	R
90	319	32319	2	Work portion Tariff 2	Float	R
90	321	32321	2	TS of day – 53	UNIX_TS (UTC)	R
90	323	32323	2	Work portion Tariff 1	Float	R
90	325	32325	2	Work portion Tariff 2	Float	R
90	327	32327	2	TS of day – 54	UNIX_TS (UTC)	R
90	329	32329	2	Work portion Tariff 1	Float	R
90	331	32331	2	Work portion Tariff 2	Float	R
90	333	32333	2	TS of day – 55	UNIX_TS (UTC)	R
90	335	32335	2	Work portion Tariff 1	Float	R
90	337	32337	2	Work portion Tariff 2	Float	R
90	339	32339	2	TS of day – 56	UNIX_TS (UTC)	R
90	341	32341	2	Work portion Tariff 1	Float	R
90	343	32343	2	Work portion Tariff 2	Float	R
90	345	32345	2	TS of day – 57	UNIX_TS (UTC)	R
90	347	32347	2	Work portion Tariff 1	Float	R
90	349	32349	2	Work portion Tariff 2	Float	R
90	351	32351	2	TS of day – 58	UNIX_TS (UTC)	R
90	353	32353	2	Work portion Tariff 1	Float	R
90	355	32355	2	Work portion Tariff 2	Float	R
90	357	32357	2	TS of day – 59	UNIX_TS (UTC)	R
90	359	32359	2	Work portion Tariff 1	Float	R
90	361	32361	2	Work portion Tariff 2	Float	R
90	363	32363	2	TS of day – 60	UNIX_TS (UTC)	R
90	365	32365	2	Work portion Tariff 1	Float	R
90	367	32367	2	Work portion Tariff 2	Float	R
90	369	32369	2	TS of day – 61	UNIX_TS (UTC)	R
90	371	32371	2	Work portion Tariff 1	Float	R
90	373	32373	2	Work portion Tariff 2	Float	R
90	375	32375	2	TS of day – 62	UNIX_TS (UTC)	R
90	377	32377	2	Work portion Tariff 1	Float	R
90	379	32379	2	Work portion Tariff 2	Float	R
90	381	32381	2	TS of day – 63	UNIX_TS (UTC)	R
90	383	32383	2	Work portion Tariff 1	Float	R
90	385	32385	2	Work portion Tariff 2	Float	R

File (FC0x14)	Offset address	Address FC0x03 FC0x04	Length	Name	Format	Access
90	387	32387	2	TS of day – 64	UNIX_TS (UTC)	R
90	389	32389	2	Work portion Tariff 1	Float	R
90	391	32391	2	Work portion Tariff 2	Float	R

File (FC0x14)	Offset address	Address FC0x03 FC0x04	Length	Name	Format	Access
91	1	32401	2	Error state	Bool	R
91	3	32403	2	TS actual period	UNIX_TS (UTC)	R
91	5	32405	2	Work portion this month Tariff 1	Float	R
91	7	32407	2	Work portion this month Tariff 2	Float	R
91	9	32409	2	TS of month – 1	UNIX_TS (UTC)	R
91	11	32411	2	Work portion Tariff 1	Float	R
91	13	32413	2	Work portion Tariff 2	Float	R
91	15	32415	2	TS of month – 2	UNIX_TS (UTC)	R
91	17	32417	2	Work portion Tariff 1	Float	R
91	19	32419	2	Work portion Tariff 2	Float	R
91	21	32421	2	TS of month – 3	UNIX_TS (UTC)	R
91	23	32423	2	Work portion Tariff 1	Float	R
91	25	32425	2	Work portion Tariff 2	Float	R
91	27	32427	2	TS of month – 4	UNIX_TS (UTC)	R
91	29	32429	2	Work portion Tariff 1	Float	R
91	31	32431	2	Work portion Tariff 2	Float	R
91	33	32433	2	TS of month – 5	UNIX_TS (UTC)	R
91	35	32435	2	Work portion Tariff 1	Float	R
91	37	32437	2	Work portion Tariff 2	Float	R
91	39	32439	2	TS of month – 6	UNIX_TS (UTC)	R
91	41	32441	2	Work portion Tariff 1	Float	R
91	43	32443	2	Work portion Tariff 2	Float	R
91	45	32445	2	TS of month – 7	UNIX_TS (UTC)	R
91	47	32447	2	Work portion Tariff 1	Float	R
91	49	32449	2	Work portion Tariff 2	Float	R
91	51	32451	2	TS of month – 8	UNIX_TS (UTC)	R
91	53	32453	2	Work portion Tariff 1	Float	R
91	55	32455	2	Work portion Tariff 2	Float	R
91	57	32457	2	TS of month – 9	UNIX_TS (UTC)	R
91	59	32459	2	Work portion Tariff 1	Float	R
91	61	32461	2	Work portion Tariff 2	Float	R
91	63	32463	2	TS of month – 10	UNIX_TS (UTC)	R
91	65	32465	2	Work portion Tariff 1	Float	R
91	67	32467	2	Work portion Tariff 2	Float	R

File (FC0x14)	Offset address	Address FC0x03 FC0x04	Length	Name	Format	Access
91	69	32469	2	TS of month – 11	UNIX_TS (UTC)	R
91	71	32471	2	Work portion Tariff 1	Float	R
91	73	32473	2	Work portion Tariff 2	Float	R
91	75	32475	2	TS of month – 12	UNIX_TS (UTC)	R
91	77	32477	2	Work portion Tariff 1	Float	R
91	79	32479	2	Work portion Tariff 2	Float	R
91	81	32481	2	TS of month – 13	UNIX_TS (UTC)	R
91	83	32483	2	Work portion Tariff 1	Float	R
91	85	32485	2	Work portion Tariff 2	Float	R
91	87	32487	2	TS of month – 14	UNIX_TS (UTC)	R
91	89	32489	2	Work portion Tariff 1	Float	R
91	91	32491	2	Work portion Tariff 2	Float	R
91	93	32493	2	TS of month – 15	UNIX_TS (UTC)	R
91	95	32495	2	Work portion Tariff 1	Float	R
91	97	32497	2	Work portion Tariff 2	Float	R
91	99	32499	2	TS of month – 16	UNIX_TS (UTC)	R
91	101	32501	2	Work portion Tariff 1	Float	R
91	103	32503	2	Work portion Tariff 2	Float	R
91	105	32505	2	TS of month – 17	UNIX_TS (UTC)	R
91	107	32507	2	Work portion Tariff 1	Float	R
91	109	32509	2	Work portion Tariff 2	Float	R
91	111	32511	2	TS of month – 18	UNIX_TS (UTC)	R
91	113	32513	2	Work portion Tariff 1	Float	R
91	115	32515	2	Work portion Tariff 2	Float	R
91	117	32517	2	TS of month – 19	UNIX_TS (UTC)	R
91	119	32519	2	Work portion Tariff 1	Float	R
91	121	32521	2	Work portion Tariff 2	Float	R
91	123	32523	2	TS of month – 20	UNIX_TS (UTC)	R
91	125	32525	2	Work portion Tariff 1	Float	R
91	127	32527	2	Work portion Tariff 2	Float	R
91	129	32529	2	TS of month – 21	UNIX_TS (UTC)	R
91	131	32531	2	Work portion Tariff 1	Float	R
91	133	32533	2	Work portion Tariff 2	Float	R
91	135	32535	2	TS of month – 22	UNIX_TS (UTC)	R
91	137	32537	2	Work portion Tariff 1	Float	R
91	139	32539	2	Work portion Tariff 2	Float	R
91	141	32541	2	TS of month – 23	UNIX_TS (UTC)	R
91	143	32543	2	Work portion Tariff 1	Float	R
91	145	32545	2	Work portion Tariff 2	Float	R
91	147	32547	2	TS of month – 24	UNIX_TS (UTC)	R
91	149	32549	2	Work portion Tariff 1	Float	R
91	151	32551	2	Work portion Tariff 2	Float	R

A.1.6 User-defined Modbus function code 0x64

Function code 0x64 was defined in order to make it possible to read historical data, such as the load profile or events stored in a logbook, out of a PAC device via Modbus.

Structure of request frame

7 bytes	1 byte	1 byte	1 byte	5 bytes
MBAP Header	Function code 0x64	Data Log Identifier	Data Identifier	Advanced Data Identifiers

The "data log identifier" is defined system-wide for all PAC devices. The data memory which is to be read out of the PAC device can be selected using this identifier. The "data identifier" and the "advanced data identifier" determine which data from the selected data memory are sent in the response data records.

Definition "Data Log Identifier"

Description	Number
Daily profile memory	0x04
Monthly profile memory	0x05
Annual profile memory	0x06
Logbook (event memory)	0x01

Definition "Data Identifier"

The "data identifier" determines which collection of measured values (or events) are sent in the data records of the response frame.

Measuring channel 1: Active energy or active power import

Measuring channel 2: Active energy or active power export

Description	Number	Can be used on " Data Log Identifier"
Measuring channels 1 and 2 (energy quantity)	0x69	0x04, 0x05, 0x06
Measuring channel 1 (energy quantity)	0x6A	0x04, 0x05, 0x06
Measuring channel 2 (energy quantity)	0x6B	0x04, 0x05, 0x06
Measuring channels 1 and 2 (energy quantity), in addition 4 counter readings (import T1, import T2, export T1, export T2)	0x6C	0x04, 0x05, 0x06
Measuring channels 1 and 2 (energy quantity), in addition 2 counter readings (total import T1+T2, total export T1+T2)	0x6D	0x04, 0x05, 0x06
4 counter readings (import T1 and T2, export T1 and T2)	0x70	0x04, 0x05, 0x06
2 counter readings (import T1, export T1)	0x71	0x04, 0x05, 0x06
2 counter readings (import T2, export T2)	0x72	0x04, 0x05, 0x06

Definition "Advanced Data Identifier"

The "advanced data identifier" has a length of 5 bytes. It consists of an object ID (4 bytes, format "unsigned long" big endian) and the number (1 byte) of data records required in the response frame.

Every data record of a historical data memory in the PAC device can be addressed by this object ID (OID) which is unique in the device. A special entry (or a number of entries which are inserted in the frame one after the other) can be read.

The highest OID in existence is available for every data memory in associated Modbus registers (see table "Data memory and associated Modbus registers").

If OID 0x00000000 is requested, the PMD returns the oldest valid OID with the associated data record. If a non-existent OID (other than 0) is requested, the PAC device returns the Modbus exception code 0x04. A syntax error in the Modbus frame also results in a Modbus exception response.

Data memory und associated Modbus registers

Description "Data Log Identifier"	Modbus register of the highest OID in existence	Data format	Length
Daily profile memory	0x010A	Unsigned long	2 registers
Monthly profile memory	0x010C	Unsigned long	2 registers
Annual profile memory	0x010E	Unsigned long	2 registers

Reading out the profile data memory (load profile, daily profile, monthly profile, annual profile)

Each of the profile data memories contains 2 measuring channels:

- Measuring channel 1: Active energy or active power import
- Measuring channel 2: Active energy or active power export

A special feature of the load profile memory (demand period duration of 15 minutes) is that these channels are also available as

- Arithmetic average power demand values (W)
- Cumulated average power demand values (W) and/or as
- Energy portions (Wh)

Each of these values can be converted to any of the others using the demand period duration and the real measurement duration which is also available.

Any entry in the profile data memory can be marked as a data variable ("information flag bytes") by the device. This information helps the user to identify occurrences during the demand periods.

Description of the "information flag bytes":

FLAG_TARIFF_T1	0x00xxxxxx
FLAG_TARIFF_T2	0x01xxxxxx
FLAG_TARIFF_UNKNOWN	0xFFxxxxxx

FLAG_QUALITY_UNSECURE	0x00800000
FLAG_QUALITY_AUXPOWER_FAIL	0x00400000
FLAG_QUALITY_PERIOD_TO_SHORT	0x00010000
FLAG_QUALITY_TIME_UNSECURE	0x00200000
FLAG_MULTIPLE_TIMECHANGE	0x00040000
FLAG_CURRENT_TRANSFORMER	0x00080000
FLAG_LOGENTRY	0x00001000
FLAG_LOGBOOK_FULL	0x00002000
FLAG_Q1	0x00000040
FLAG_BAD_QUALITY_MARKER	0x00000001

Examples

A number of Modbus frames are provided here to indicate the readout of various data logs in the device using the function code 0x64.

Example of request frame

7 bytes	1 byte	1 byte	1 byte	5 bytes
MBAP Header	Function code 0x64	Data log identifier (Tagesprofilspeicher)	Data identifier (all channels energy)	Advanced data identifiers (4 byte OID and 1 byte number of records.)
0x0000 0x0000 0x0009 0x01	0x64	0x04	0x6D	0x00002CE2 0x02

Example of response frame

Bytes in hex	Description		
00 00 00 00 00 64 01	MBAP Header		
64	Modbus user defined function code		
61	payload length in bytes (starting with the following byte to the end, excluding CRC)		
04	Data log identifier -> day profile memory		
6D	Data identifier -> channels 1 + 2 (active energy) and Readings of energy counters T1+T2		
00 00 2C E2	Set the read pointer to OID 0x00002CE2 to the of the day profile memory		
02	Number of records inserted in this telegram (may be smaller than requested)		
2D	Length of first record in bytes (including this byte)		
	0x2D data bytes of 1st record with OID 0x00002CE2		
5E 84 CF 98	timestamp act.period	unix time UTC	4 byte
00 00 0E 10	Timezone offset in s	signed long	4 byte
00 00 2C E2	OID act. Period (unique period entry identification index)	unsigned long	4 byte
41 90 D1 A4	Active energy Import act. Period in Wh	float	4 byte
00 00 00 00	Active energy Export act. Period in Wh	float	4 byte
41 41 B4 EB 44 67 2E 00	Active energy counter reading Import T1+T2 act. Period in Wh	double	8 byte
00 00 00 00 00 00 00 00	Active energy counter reading Export T1+T2 act. Period in Wh	double	8 byte
00 00 07 7E	Real load profile period length act. Period in ms	unsigned long	4 byte
00 01 00 40	Information flag bytes act. period	Bitfield	4 byte

Bytes in hex	Description		
2D	Length of 2nd record in a row starting with OID 0x2CE3 in bytes (including this byte)		
	0x2D data bytes of record 0x02 with OID 0x2CE3		
5E 84 D3 1C	timestamp act.period	unix time UTC	4 byte
00 00 0E 10	Timezone offset in s	signed long	4 byte
00 00 2C E3	OID act. Period (unique period entry identification index)	unsigned long	4 byte
41 90 D1 A5	Active energy Import act. Period in Wh	float	4 byte
00 00 00 00	Active energy Export act. Period in Wh	float	4 byte
41 41 B4 F4 51 81 7A 00	Active energy counter reading Import T1+T2 act. Period in Wh	double	8 byte
00 00 00 00 00 00 00 00	Active energy counter reading Export T1+T2 act. Period in Wh	double	8 byte
00 00 07 7E	Real load profile period length act. Period in millise-conds	unsigned long	4 byte
00 01 00 40	Information flag bytes act. period	Bitfield	4 byte

A.1.7 Structure - Digital input status and digital output status with the function codes 0x03 and 0x04

The following are available via Modbus:

- "Status of the digital input"
- "Status of the digital output"

Input status and output status of the PAC2200

Table A- 4 Structure - status of the digital inputs (Modbus offset 209) and digital outputs (Modbus offset 207)

Name	Length	Status	Byte	Bit	Bit mask	Access
Status: Digital output	32 bits	DO	3	0	0x00000001	R
Status: Digital input	32 bits	DI	3	0	0x00000001	R

A.1.8 Structure - Device diagnostics and device status with the function codes 0x03 and 0x04

Structure

Table A- 5 Modbus offset 205, register 2: Structure device status and device diagnostics

Byte	Bit	Device status	Type	Bit mask	Value range	Access
0	0	No synchronization pulse	Status	0x01000000	0 = not active 1 = active	R
0	1	Device configuration menu is active	Status	0x02000000		R
0	2	Voltage overload	Status	0x04000000		R
0	3	Current overload	Status	0x08000000		R
0	5	Update status is active	Status	0x20000000		R
0	6	Hardware write protection is active	Status	0x40000000		R
0	7	Modbus communication is write-protected	Status	0x80000000		R
1	1	Maximum pulse rate exceeded	Status	0x00020000		R
1	6	SNTP not synchronized	Status	0x00400000		
1	7	Wait for user interaction	Status	0x00800000		R
2	0	Relevant parameter changes[1)]	saving	0x00000100		R
2	2	Maximum pulse rate exceeded[1)]	saving	0x00000400		R
2	3	Restart of the device[1)]	saving	0x00000800		R
2	4	Resetting of energy counter by user[1)]	saving	0x00001000		R
1) Only these device statuses are to be acknowledged.						

A.1.9 Modbus status parameters with the function code 0x02

Status parameters

You can use the Modbus function code 0x02 on all the status parameters listed below.

Table A- 6 Status parameters

Offset	Number of registers	Name	Format	Value range	Access
108	0	Relevant parameter changes	Bit	0 = not active 1 = active	R
110	0	Maximum pulse rate exceeded	Bit		R
111	0	Restart of the device	Bit		R
112	0	Resetting of energy counter by user	Bit		R
117	0	Maximum pulse rate exceeded	Bit		R
122	0	SNTP not synchronized	Bit		R
123	0	Wait for user action	Bit		R
124	0	No synchronization pulse	Bit		R
125	0	Device configuration menu is active	Bit		R
126	0	Voltage overload	Bit		R
127	0	Current overload	Bit		R
128	0	Date/time inaccurate	Bit		R
129	0	Device is updated	Bit		R
129	0	FW is updated	Bit		R
130	0	The device is hardware write-protected.	Bit		R
131	0	Modbus communication is write-protected	Bit		R
200	0	Digital input 0	Bit		R
300	0	Digital output 0	Bit		R

A.1.10 Modbus settings with the function codes 0x03, 0x04 and 0x10

Addressing the settings

You can use the Modbus function codes 0x03, 0x04 for read accesses and 0x10 for write accesses on all the settings parameters listed below.

Table A- 7 Settings parameters

Offset	Number of registers	Name	Unit	Format	Value range	Access
49999	2	Rated current display range	A	unsigned long	1-10000	RW
50001	2	Connection type		unsigned long	0 = 3P4W 4 = 1P2W	RW

Offset	Number of registers	Name	Unit	Format	Value range	Access
50011	2	Primary current	A	unsigned long	1-99999A (5A device) 65A (65A device)	5A device - RW 65A device - R
50013	2	Secondary current	A	unsigned long	1A, 5A (5A device) 65A (65A device)	5A device - RW 65A device - R
50021	2	Load profile demand period	Min.	unsigned long	1;2;3;4;5;6;10;12;15;20;30;60	R
50023	2	Synchronization		unsigned long	0 = No synchronization 1 = Synchronization via bus 2 = Synchronization via digital input 3 = Synchronization via internal clock	R
50047	2	dialog language		unsigned long	0 = German 1 = English	RW
50049	2	Phase labels EU/US		unsigned long	0 = IEC 1 = US	RW
50051	2	Configurable counter source		unsigned long	0 = digital input	RW
50055	2	Display contrast		unsigned long	1-10	RW
50057	2	Display backlight level (normal mode)	%	unsigned long	0-3	RW
50059	2	Display backlight level (dimmed mode)	%	unsigned long	0-3	RW
50061	2	Time until dimmed	min	unsigned long	0-99	RW
50147	2	DO - Timeout		unsigned long	Digital output remote timeout 1..18000 seconds 0 = disables timeout (default)	RW
50149	2	Default menu no.		unsigned long	1 = MEAS_VLN 2 = MEAS_VLL 3 = MEAS_I 4 = MEAS_S 5 = MEAS_P 6 = MEAS_Q 7 = MEAS_SPQ 8 = MEAS_PF 9 = MEAS_F 10 = MEAS_WORK_P 11 = MEAS_WORK_Q 12 = MEAS_WORK_S	RW
50151	2	Timeout for return to default menu	s	unsigned long	0 = No timeout 10s-3600s 1s <= timeout < 10: time-out is set to 10s	RW
50231	2	date format		unsigned long	0 = dd.mm.yyyy 1 = mm/dd/yy 2 = yyyy-mm-dd	RW

Offset	Number of registers	Name	Unit	Format	Value range	Access
50233	2	Daylight saving		unsigned long	0 = No 1 = Auto EU 2 = Auto US 3 = daylight saving table	RW
50235	2	Time zone	min	long	MODULO(30)==0	RW
50237	2	Output - Pulse divider		unsigned long	0 = 1kWh 1 = 10kWh 2 = 100kWh 3 = 1000kWh	RW
50239	2	Input - pulse divider		unsigned long	0 = 1kWh 1 = 10kWh 2 = 100kWh 3 = 1000kWh	RW
50241	2	Invert display		unsigned long	0 = No 1 = Yes	RW
50243	2	Change current L1 direction		unsigned long	0 = No 1 = Yes	RW
50245	2	Change current L2 direction		unsigned long	0 = No 1 = Yes	RW
50247	2	Change current L3 direction		unsigned long	0 = No 1 = Yes	RW
50249	2	I(N) on display		unsigned long	0 = No 1 = Yes	RW

Table A- 8 Settings parameter for the digital input

Offset	Number of registers	Name	Unit	Format	Value range		Access
50025	2	DI - Usage type		unsigned long	0 = no action 1 = pulse interface 2 = switching on/off peak 3 = synchronization 4 = display backlight		RW
50029	2	DI - Index		unsigned long	0 = kWh 1 = kvarh		RW
50031	2	DI - Pulses per kWh/kvarh		unsigned long	1-4000		RW
50239	2	Input pulse divider	kWh	unsigned long	0 =	1 kWh	RW
					1 =	10 kWh	
					2 =	100 kWh	
					3 =	1000 kWh	

Table A- 9 Settings parameter for the digital output

Offset	Number of registers	Name	Unit	Format	Value range		Access
50033	2	DI - Group Assignment		unsigned long	0-99		RW
50035	2	DO - Usage type		unsigned long	0 = no action 1 = device active 2 = switching output 3 = direct.of rotation 5 = pulse output		RW
50041	2	DO - Index		unsigned long	0 = Import kWh 1 = Export kWh 2 = Import kvarh 3 = Export kvarh		RW
50043	2	DO - Pulses per kWh/kvarh		unsigned long	1-4000		RW
50045	2	DO - Pulse length		unsigned long	30-500		RW
50147	2	Digital output timeout	s	unsigned long	0 = AUS 0.1 ... 18000 = Output is reset after expiry of the time, provided there is no operator input.		RW
50237	2	Output pulse divider	kWh	unsigned long	0 =	1 kWh	RW
					1 =	10 kWh	
					2 =	100 kWh	
					3 =	1000 kWh	

A.1.11 Modbus communication parameters with the function codes 0x03, 0x04 and 0x10

Addressing the communication parameters

Table A- 10 Communication parameters

Offset	Number of registers	Name	Unit	Format	Applicable Modbus function codes	Value range	Access
62983	2	Aggregation file 1 (period length)	-	unsigned long	• 0x03 • 0x04 • 0x10	>3s integer divider of a minute, or an hour or a day	RW
62985	2	Aggregation file 1 (method)	-	unsigned long	• 0x03 • 0x04 • 0x10	0 = AUTO 1 = RMS 2 = ARITHMETIC	RW
62987	2	Aggregation file 2 (period length)	-	unsigned long	• 0x03 • 0x04 • 0x10	preferred integer multiplier of Stage (-1) period length integer divider of a minute, or an hour or a day	RW

Offset	Number of registers	Name	Unit	Format	Applicable Modbus function codes	Value range	Access
62989	2	Aggregation file 2 (method)	-	unsigned long	• 0x03 • 0x04 • 0x10	0: AUTO 1: RMS 2: ARITHMETIC	RW
62991	2	DHCP AN/AUS	-	unsigned long	• 0x03 • 0x04 • 0x10	0 ... 1	RW
62993	2	SNTP server IP address	-	unsigned long	• 0x03 • 0x04 • 0x10	0 ... FFFFFFFFh	RW
62995	2	SNTP client mode	-	unsigned long	• 0x03 • 0x04 • 0x10	0 = SNTP client OFF 1 = SNTP active client 2 = SNTP broadcast client	RW
62997	2	Subnet firewall ON/OFF	-	unsigned long	• 0x03 • 0x04 • 0x10	-	RW
63001	2	IP address	-	unsigned long	• 0x03 • 0x04 • 0x10	0 ... FFFFFFFFh	RW
63003	2	Subnet mask	-	unsigned long	• 0x03 • 0x04 • 0x10	0 ... FFFFFFFFh	RW
63005	2	Gateway	-	unsigned long	• 0x03 • 0x04 • 0x10	0 ... FFFFFFFFh	RW
63007	2	Bootloader version	-	unsigned long	• 0x03 • 0x04	char, uchar, uchar, uchar	R
63009	2	Password protection ON/OFF	-	unsigned long	• 0x03 • 0x04	0; 1	R
63135	2	MODBUS RTU address (if RS485 port is available)	-	unsigned long	• 0x03 • 0x04 • 0x10	1 - 247	RW

Offset	Number of registers	Name	Unit	Format	Applicable Modbus function codes	Value range	Access
63137	2	MODBUS RTU baud rate (if RS485 port is available)	-	unsigned long	• 0x03 • 0x04 • 0x10	0 = 4800 baud 1 = 9600 baud 2 = 19200 baud 3 = 38400 baud 4 = 57600 baud 5 = 115200 baud	RW
63139	2	MODBUS RTU data bits/ parity/ stop bits (if RS485 port is available)	-	unsigned long	• 0x03 • 0x04 • 0x10	0 = 8N2 1 = 8E1 2 = 8O1 3 = 8N1	RW
63141	2	MODBUS RTU response time (if RS485 port is available)	ms	unsigned long	• 0x03 • 0x04 • 0x10	0 - 255	RW
63143	2	HTTP Server port number	-	unsigned long	• 0x03 • 0x04 • 0x10	0 = OFF	RW
64001	27	IM0 data	-	IM0STRUCT	• 0x03 • 0x04	-	R
64028	89	IM1 – IM4 data	-	IM14STRUCT	• 0x03 • 0x04 • 0x10	-	RW
65290	2	Hardware write protection ON/OFF (requires pressing of "SW" key on device)	-	unsigned long	• 0x10	0 = ON 1 = OFF	RW

A.1.12 Modbus device information with the function codes 0x03, 0x04 and 0x10

Addressing the device information parameters

You access the following device information parameters block-by-block only, e.g. read from Offset 64001 27 Register.

Note

Error in the case of inconsistent access to I&M data.

Please ensure the start offset and the number of registers are correct when making **read accesses** and **write accesses**. Always read or write the entire block.

Please ensure the start offset and the number of registers are correct when making **write accesses**.

If a value consists of several registers, a read command applied in the second register, for example, will generate an error code. The PAC2200 will also output an error code if, for example, a write operation ends in the middle of a multi-register value.

Table A- 11 I&M 0 parameters with the function codes 0x03 and 0x04

Offset	Total registers	Number of registers per parameter	Name	Format	Value range	Access
Start offset 64001	**27**	[1]	Manufacturer's ID	unsigned short	42*)	R
[64002]		[10]	Order No.	Char 20	ASCII	R
[64012]		[8]	Serial number	Char 16	ASCII	R
[64020]		[1]	Hardware version	unsigned short	0 ... 65535	R
[64021]		[2]	Firmware version	1 char, 3 unsigned char	V 0.0.0 ... V 255.255.255	R
[64023]		[1]	Counter for changes	unsigned short	1 ... 65535	R
[64024]		[1]	Profile ID	unsigned short	3A00 ... F6FF	R
[64025]		[1]	Specific Profile ID	unsigned short	-	R
[64026]		[1]	Version of the I&M data	2 unsigned char	0.0 ... 255.255	R
[64027]		[1]	Supported I&M data	unsigned short	00 ... FF	R
*) 42 stands for Siemens AG						

Table A- 12 I&M 1-4 parameters with the function codes 0x03, 0x04 and 0x10

Offset	Total registers	Number of registers per parameter	Name	Format	Value range	Access
Start offset 64028	**89**	[16]	Plant identifier	Char 32	ASCII	RW
[64044]		[11]	Location identifier	Char 22	ASCII	RW
[64055]		[8]	Installation date	Char 16	ASCII	RW
[64063]		[27]	Comment	Char 54	ASCII	RW
[64090]		[27]	Signature	Char 54	-	RW

A.1.13 Modbus command parameters

Addressing the command parameters

You can apply the Modbus function code 0x06 to the command parameters.

Table A- 13 Command parameters

Offset	Number of registers	Name	Unit	Format	Value range		Access
60000	1	Reset the device to factory settings	-	unsigned short	-		W
60001	1	Device reset (without changing the Modbus address)	-	unsigned short	-		W
60005	1	Load profile synchronization	Min.	unsigned short	1;2;3;4;5;6;10;12;15;20;30;60		W
60006	1	Switching tariff	-	unsigned short	0 =	Main tariff	W
					1 =	Secondary tariff	
60007	1	Acknowledge the diagnostics bits[3)] (cf. stored bits in unsigned long beginning offset 205)	-	unsigned short	0 ... ffffh		W
60008	1	Switching outputs (if parameterized)	-	unsigned short	0ffh ... 1ffh		W
					Byte 0 = 0	Digital output 0.0	
					Byte 1 = 0	OFF	
					Byte 1 = 1	ON	
60009	1	Switching command for vector group	-	unsigned short	High 0 ... 99, Low 0 ... 1 High byte group assignment Low byte 1 = ON, 0 = OFF		W
60010	1	Reset des daily / monthly energy counter memory	-	unsigned long	-		W
3) The Modbus Master must acknowledge these diagnostics bits.							

A.1.14 Modbus standard device identification with the function code 0x2B

Addressing the Modbus standard device identification

You can use Modbus function code 0x2B on these device identification parameters.

Table A- 14 Parameter for Modbus standard device identification

Object ID	Name	Format	Access
OID 0	Manufacturer	String	R
OID 1	Manufacturer device name	String	R
OID 2	Firmware version / bootloader version	String	R

Index

A

Approvals, 91

Average power demand values, 13

B

Bit mask, 120, 121

C

CE conformity, 91, 91

Classroom

  Training, 11

Cleaning, 79

Command parameters, 129

Communication, 86

Communication parameters, 125

Components of the product, 7

Connection elements, 87

Connection examples, 45

Connection type

  Dependency of the measured variables, 18

Connection types, 17

Counters, 13

D

Degree of protection, 89

Device diagnostics, 121

Device identification parameters, 130

Device status, 121

Display

  Measured variables depending on the connection type, 18

Display and operator control

  Performance features, 14

E

Environmental conditions, 89

Error code, 99, 128

Exception code, 98

F

Firmware updates, 79

Function code, 97, 130

G

General safety notes, 8

I

Installation location, 39

Interface

  Performance features, 14

M

Measured value acquisition, 83

Measured variables

  Display, 18

Measuring method, 83

Memory

  Features, 14

Modbus

  Digital input, status, 120

  Digital output, status, 120

  Exception codes, 98

Modbus function code, 99, 122, 122, 125, 129, 130

Modbus measured variables, 99
Modbus RTU, 86
Mounting
    Procedure, 40

O

Object ID, 130
Offset, 98, 99, 121, 122, 122, 124, 125, 125, 129
Open Source Software, 10
    Use, 10

P

Parameter
    Command, 129
    Communication, 125
    Device information, 130
    Status, 122
Prerequisites
    Startup, 63
Procedure
    Mounting, 40
Protection class, 89

R

Register, 98, 99, 122, 122, 124, 125, 125, 129
Removal, 40
Repairs, 81
    Loss of warranty, 81
RS 485 interface, 86

S

Screw terminal, 87
Security
    Performance features, 14
Security functions, 9
Startup, 63
    Prerequisites, 63
Status parameters, 122

T

Technical specifications, 83
    Approvals, 91
    Communication, 86
    Connection elements, 87
    Degree of protection, 89
    Digital input, 85
    Digital output, 86
    Environmental conditions, 89
    Measuring accuracy, 85
    Measuring inputs, 83, (5 A device), (65 A device)
    Power supply, (65 A device), (5 A device)
    Protection class, 89
    RS 485 interface, 86
    Screw terminal, 87
Training, 11, 11
    Learning paths, 11
    WBT, 11

U

Updating the firmware, 79

W

WBT
    Training, 11
WBT – web-based training, 11

Further Information

Always at your disposal: our extensive support
www.siemens.com/online-support

Published by
Siemens AG

Smart Infrastructure
Electrical Products
Postfach 10 09 53
93009 REGENSBURG, Germany

For the U.S. published by
Siemens Industry Inc.

100 Technology Drive
Alpharetta, GA 30005
United States

Subject to change.

SI EP
Online