Solar systems by Schweizer:
Mounting Instructions – Solrif

This project has received funding from the *European Union's Horizon 2020 research and innovation programme under grant agreement* N° 817991

© Ernst Schweizer AG

Ernst Schweizer AG
Bahnhofplatz 11
8908 Hedingen, Switzerland

Telephone +41 44 763 61 11
solar@ernstschweizer.com
www.ernstschweizer.com

Solar systems by Schweizer:
Mounting Instructions – Solrif

Contents

Scope of application 3
Exclusion of liability 3
Explanation of symbols 4
Requirements for the roof 4
Hazards due to electrical energy 5
Transport and packaging 5
Supplementary information 5
Mounting inside corners 5
Preparation 6
Working area 6
Solrif N to Solrif D 6
Earthing 7
Overview 8
Materials and tools 8
Safety 8
Horizontal and vertical section 9
Mounting the Solrif field 10
Maintenance and cleaning 16
Replacing modules 16
Disinstallation and disposal 16

Ernst Schweizer AG
Bahnhofplatz 11
8908 Hedingen, Switzerland

Telephone +41 44 763 61 11
solar@ernstschweizer.com
www.ernstschweizer.com

© Ernst Schweizer AG

Scope of application

– This system has been designed solely for the generation of electricity from solar energy and as weather protection.
– The mounting of full-surface PV installations, where the PV field extends to the roof edges, is possible, but is not covered by these mounting instructions.
– Solrif modules are solely designed for in-roof mounting in accordance with this manual.
– Information on electrical connections, earthing and wiring can be found in the relevant plans and component instructions.
– Correct use includes observing all the information in this manual.
– These instructions apply to the Solrif N as well as to the Solrif D system.
– The sheet metal surround is designed and tested for typical interlocking tiles. Its suitability for other roof coverings or connection to roof edges and roof superstructures must be assessed by a specialist; if necessary, transition sheets must be made by a roofing materials specialist. Suggested solutions can be found at www.solrif.com.

Any use of the system that goes beyond correct use, as well as any different use of the system or of the Solrif modules, counts as incorrect use and can lead to dangerous situations.

Illustrations in this manual are intended for basic understanding, and may deviate from the actual design of the system.

Exclusion of liability

– The information and safety instructions in this manual have been compiled taking into account the currently applicable norms, guidelines and regulations, the latest technology and the accumulated experience of Ernst Schweizer AG.
– The shipment contents, or the design of the system, can deviate from the descriptions and diagrams specified in this manual because of optional items ordered, manufacture of customised designs or the latest technological changes.
– Apart from the contractually agreed obligations, the manufacturer's General Terms and Delivery Conditions apply. These are subject to the laws that were valid at the juncture when the contract was concluded.
– Ernst Schweizer AG reserves the right to make technical changes to the system as part of further development to improve performance characteristics and safety.
– Ernst Schweizer AG accepts no liability for damages and accidents arising from the following causes:
  – Inappropriate use of the mounting system
  – Non-observance of the information and instructions in this manual
  – Work carried out on or with the system by non-qualified or unauthorised personnel
  – Yield losses due to electrical defects of the modules

© Ernst Schweizer AG

Ernst Schweizer AG
Bahnhofplatz 11
8908 Hedingen, Switzerland

Telephone +41 44 763 61 11
solar@ernstschweizer.com
www.ernstschweizer.com

Explanation of symbols

Warning of electric shock

Note

Follow SPT software report

Use a harness

Wear safety goggles

Wear working gloves

Wear safety shoes

Wear a helmet

Wear ear protection

Sawing/cutting work step

Make electrical connection

Requirements for the roof

– Roof pitch: 10° to 75° (with foil underroof)
– Underlay, sub-roof membrane against condensate and moisture according to ZVDH/SIA 232/1, temperature resistance up to 80° C
– Wooden substructure: analogous to tiled roof or on vertical counter battens.
– Wood quality: Strength category C24

Allow an additional requirement of 10% for wood offcuts compared to the batten plan. In addition, keep a range of auxiliary material to hand to smooth out any irregularities in the roof construction or to be able to implement connections or linings.

Note
Permissible deviation from the flatness of the substructure 0,5 % (5 mm per metre)

Note
Stepping on modules that have already been laid can lead to cell breakage and, in the long term, to a reduction in performance. If unavoidable, please follow the manufacturer's instructions or only use the appropriate devices.

© Ernst Schweizer AG

Ernst Schweizer AG
Bahnhofplatz 11
8908 Hedingen, Switzerland

Telephone +41 44 763 61 11
solar@ernstschweizer.com
www.ernstschweizer.com

Hazards due to electrical energy

WARNING

– Solar modules produce electricity when light falls on them.
– Have work on the electrical system carried out only by qualified electricians.
– Observe the regulations applicable at the installation site.
– If modules are found to be damaged, please contact the supplier.
– In case of damage to the cable insulation, immediately disconnect the power circuit and arrange for repair.
– Do not connect or disconnect cable assemblies if they are carrying current.
– Make sure that the maximum permissible system voltage is not exceeded when connecting the modules in series.

Note

– Make sure that when modules are connected in parallel, each row is individually protected by a fuse.
– Observe the instructions of the module manufacturer and of the system planner.
– Observe the information sheet on equipotential bonding and lightning protection at www.solrif.com.

Transport and packaging

Please observe the handling instructions on the packaging. If the goods or the packaging show any defects, please contact the supplier.
– Do not set the module down on its glass rim. Risk of damage to property!
– Leave the module in its original packaging until immediately prior to insertion into the PV array.
– Never hold or carry the module under any circumstances by its connection cables or junction box.

Supplementary information

You will find further information at www.solrif.com in the following documents:
– Application range of Solrif with regard to watertightness and minimum requirements for the roof underlay
– Lightning protection concept
– Information sheet for lightning and overvoltage protection with Solrif
– Fire protection requirements with Solrif in Switzerland
– Application range for Solrif with elevated snow loads
– Leaflet on the use of Solrif on curved roofs
– Blind Modules leaflet for Solrif in-roof PV system

Solar systems by Schweizer:
Short installation manual – Solrif
Additional information for the mounting of inner corners

Mounting inside corners

The mounting of the sheet metal surround for PV fields with inner corners is described in the supplementary document ‘Short mounting instructions – Solrif, supplementary information for the installation of inner corners’.

© Ernst Schweizer AG

Preparation

Before installation, the following documents must be checked for completeness and taken into account:
– Solar.Pro.Tool documentation (SPT), incl. parts list and CAD plan
– Electrical planning (cable routing plan)
– Protection concepts (lightning protection, earthing, equipotential bonding)
– Roof Plan

Working area

– Safety equipment such as scaffolding etc. must be professionally installed before installation.
– Observe the local and national regulations for the installation of PV systems, safety equipment and electrical systems.
– Check goods and auxiliary equipment for completeness and damage.

Solrif N to Solrif D

The mounting of the two systems is identical. The systems differ in the module frame and edge profile geometry, which means that different mounting brackets are required. The same grid dimensions are assumed for both systems.

Solrif N profiles

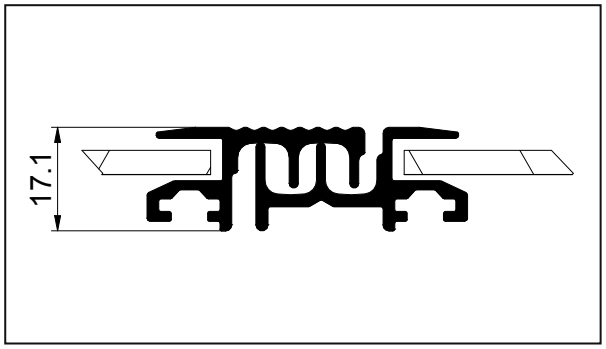

Solrif D profiles

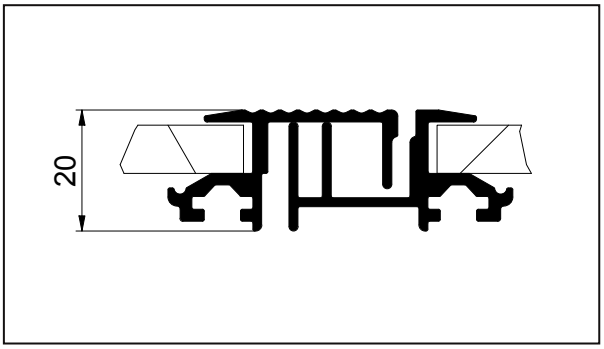

*Alternative: Earthing cable set 10mm² (15092)

© Ernst Schweizer AG

Ernst Schweizer AG
Bahnhofplatz 11
8908 Hedingen, Switzerland

Telephone +41 44 763 61 11
solar@ernstschweizer.com
www.ernstschweizer.com

Earthing
Only attach the cable after the mounting bracket is installed.

Earthing terminal
If the modules are to be grounded, attach the earthing terminal (article number 21899) as follows:

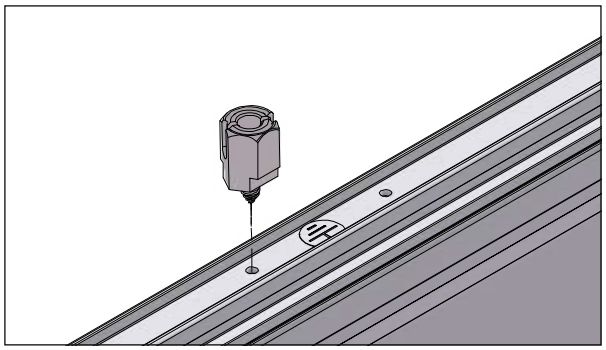

Preparation: Screw on the earthing terminal

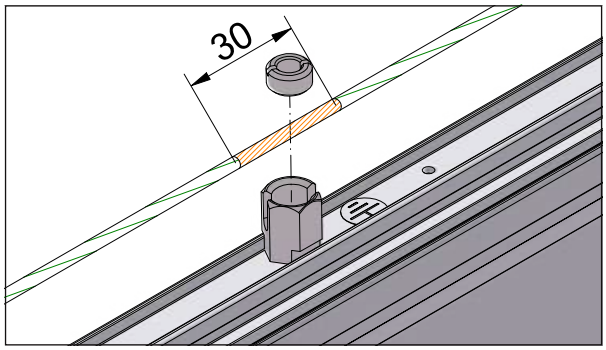

Remove 30 mm of the earthing cable insulation and press into the earthing terminal

Earthing set

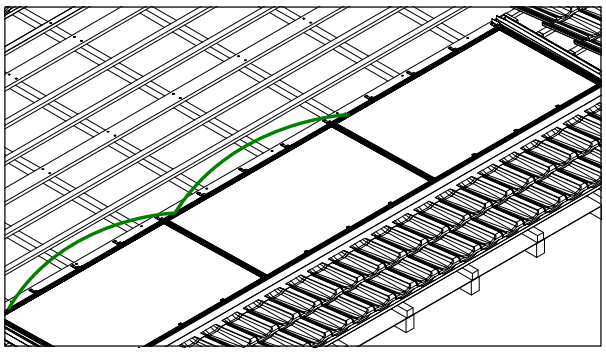

Attach the earthing set **after** installing the uppermost mounting bracket.

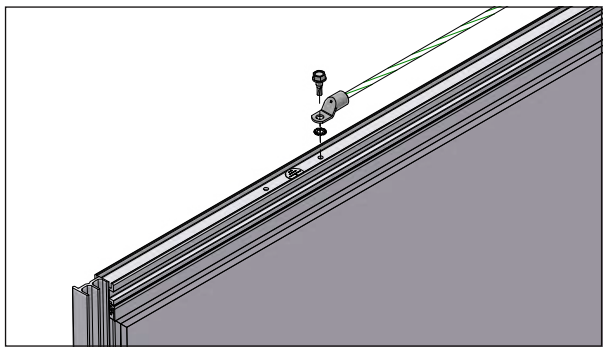

Cable lug, serrated washers

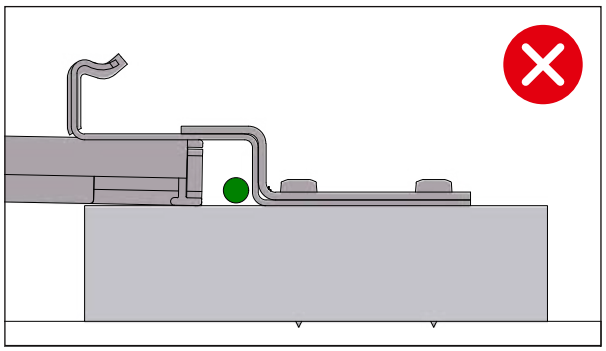

Do **not** lay the earthing cable between the module and the bracket.

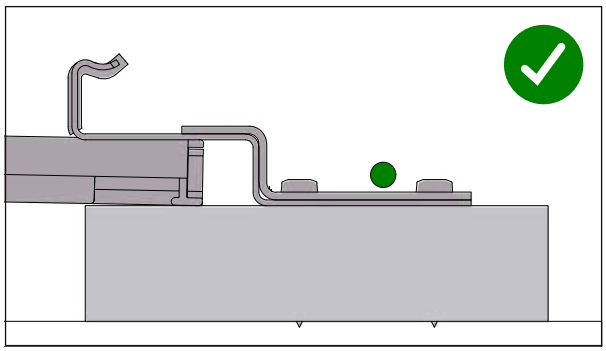

Lay the earthing cable **outside** the bracket.

© Ernst Schweizer AG

Ernst Schweizer AG
Bahnhofplatz 11
8908 Hedingen, Switzerland

Telephone +41 44 763 61 11
solar@ernstschweizer.com
www.ernstschweizer.com

Solar systems by Schweizer:
Mounting Instructions – Solrif

Overview

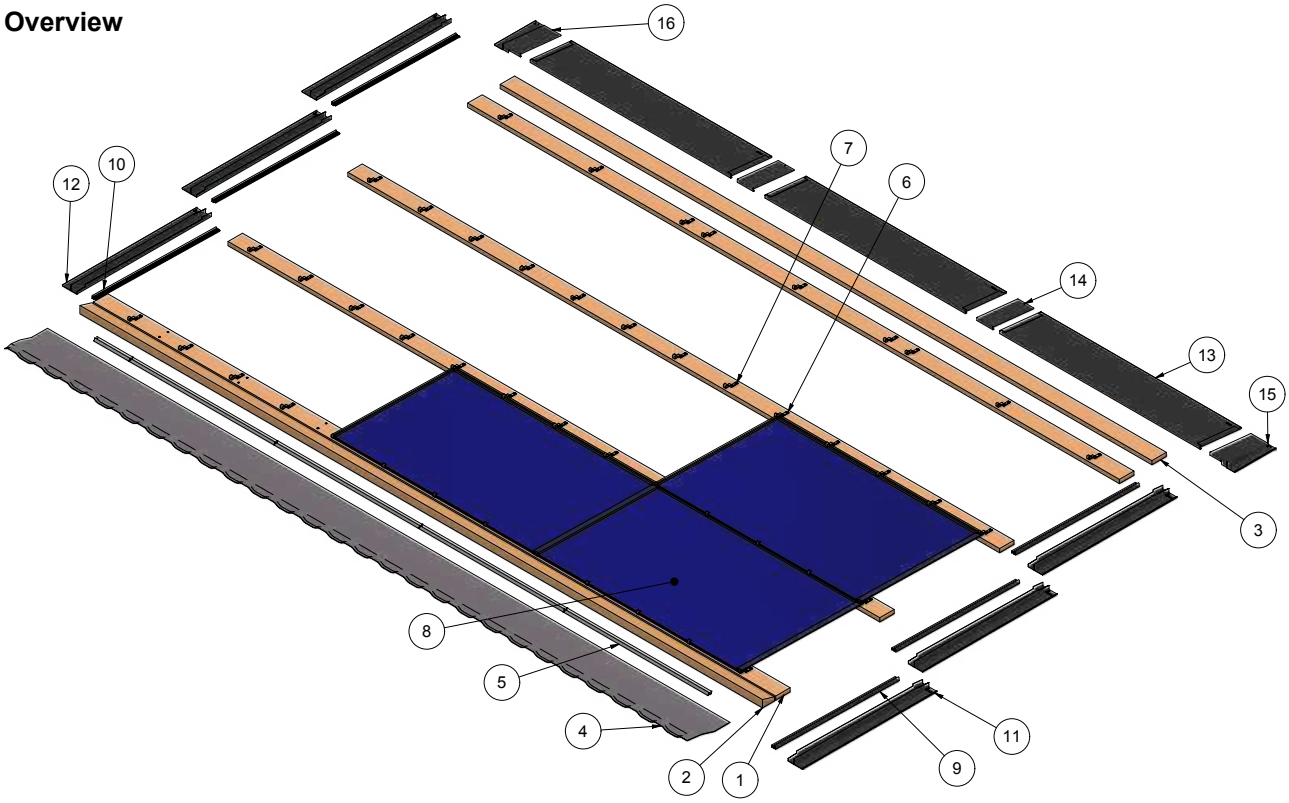

① Solrif batten
② Wedge plank
③ Solrif batten
④ Connecting sheet
⑤ Eaves profile
⑥ Mounting clamp profile
⑦ Mounting clamp glass
⑧ Solrif PV module
⑨ Flashing profile right
⑩ Flashing profile left
⑪ Side flashing right
⑫ Side flashing left
⑬ Top flashing
⑭ Top flashing joiner
⑮ Corner flashing right
⑯ Corner flashing left

Materials needed for assembly
– Suitable wood screws for fastening the battens
– ① ③ Solrif battens 120 × 30 mm
– ② Wedge plank
– SPT project report

Tools required
– Cordless screwdriver with Torx T20 bit insert
– Hammer
– Measuring equipment
(e.g. tape measure and chalk line)
– Mounting gauge (recommended)
– Guide line
– Metal saw

Safety

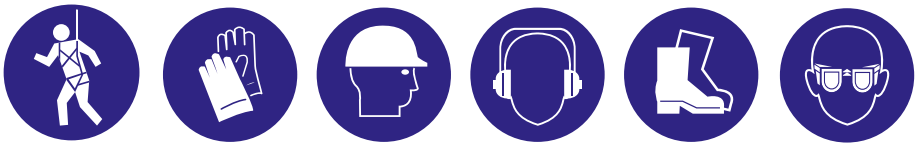

© Ernst Schweizer AG

Horizontal section

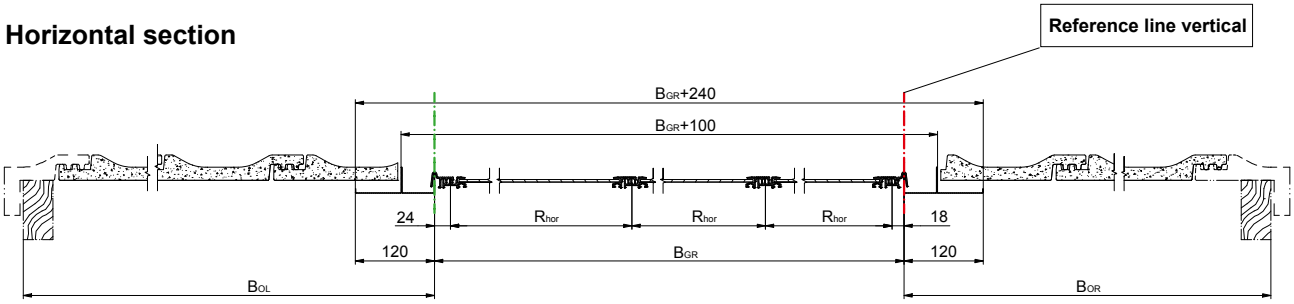

Illustration: horizontal section Solrif

Vertical section

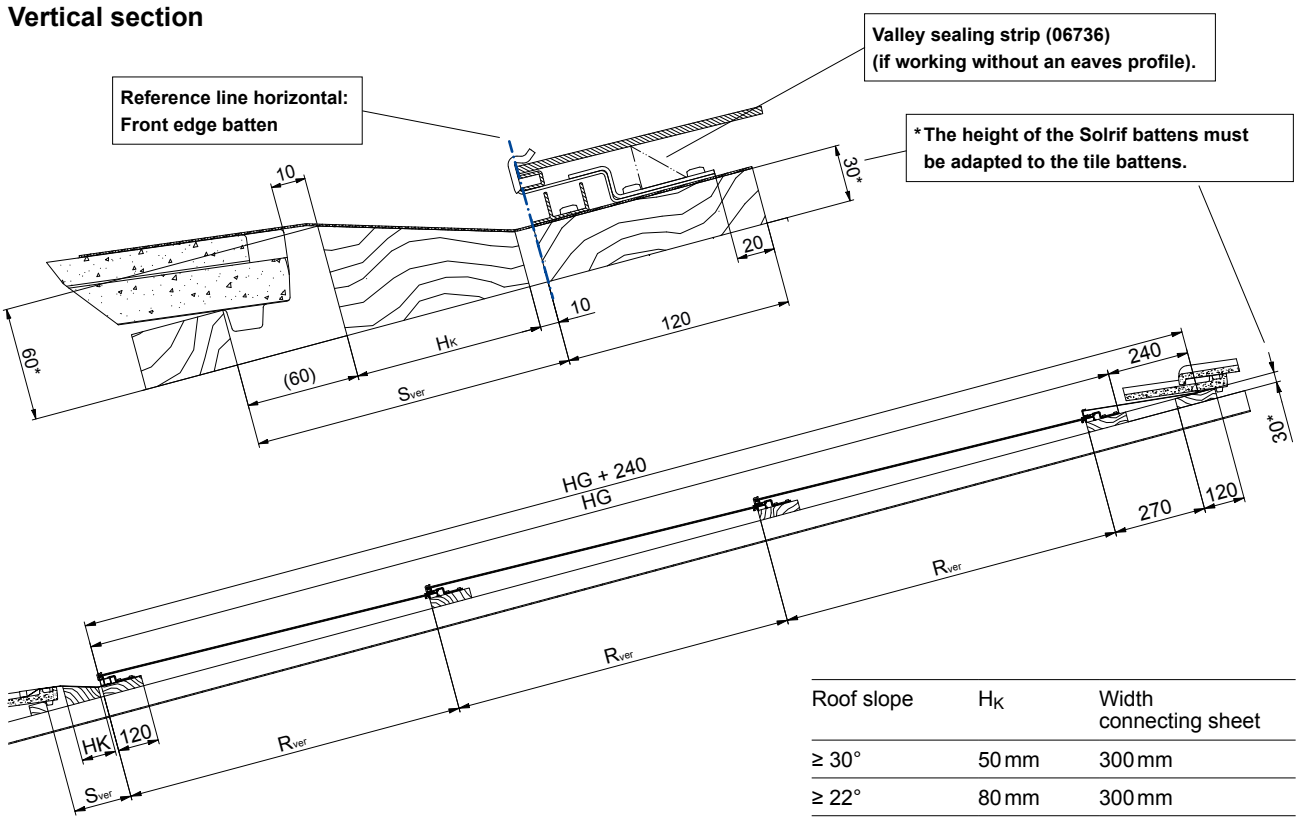

Illustration: vertical section Solrif

Roof slope	H_K	Width connecting sheet
≥ 30°	50 mm	300 mm
≥ 22°	80 mm	300 mm
≥ 15°	120 mm	2 × 300 mm
≥ 12°	160 mm	2 × 300 mm
≥ 10°	240 mm	3 × 300 mm

SPT

These measurements may be found in the SPT report:
B_{GR}: PV field width = (R_{hor} × no. of modules horizontal) +42 mm
B_{OL}: peripheral distance left
B_{OR}: peripheral distance right
H_G: PV field height = (R_{ver} × no. of modules vertical) +100 mm
R_{hor} horizontal grid measurement = module width -18 mm
R_{ver} vertical grid measurement = module height - 32 mm
S_{ver}: distance 1st Solrif batten

© Ernst Schweizer AG

Ernst Schweizer AG
Bahnhofplatz 11
8908 Hedingen, Switzerland

Telephone +41 44 763 61 11
solar@ernstschweizer.com
www.ernstschweizer.com

Mounting the Solrif field

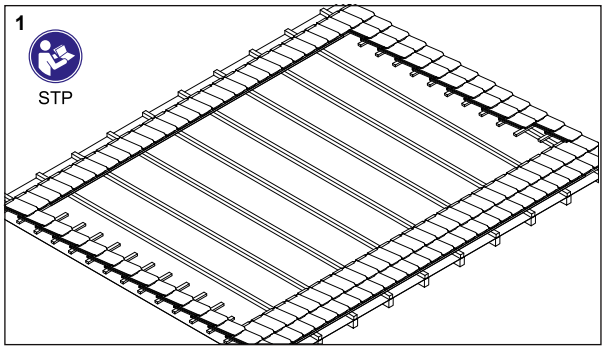

Remove tiles and, if necessary, also the tile battens in the area of the module surface on a generous scale.

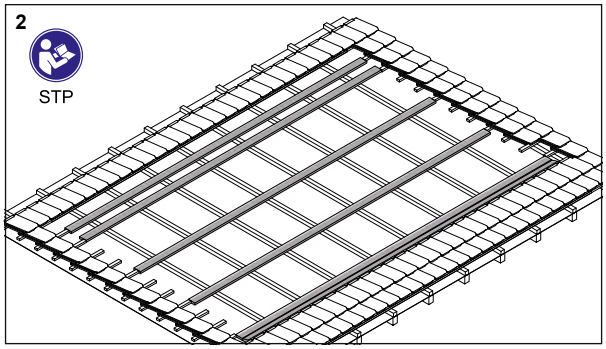

Assemble Solrif battens, wedge plank and supporting batten in accordance with instructions.

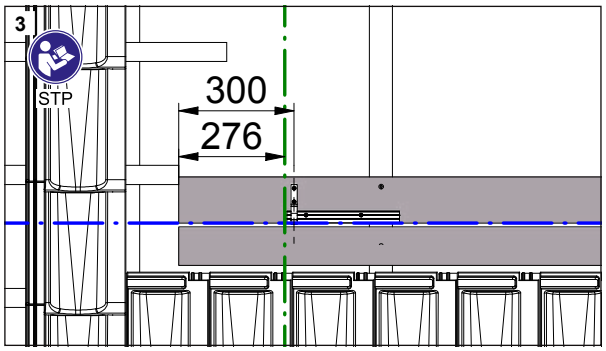

The adapter plank and lowest Solrif batten are extended.

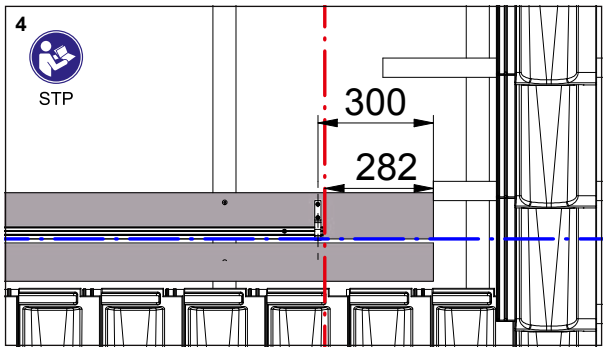

The adapter plank and lowest Solrif batten are extended.

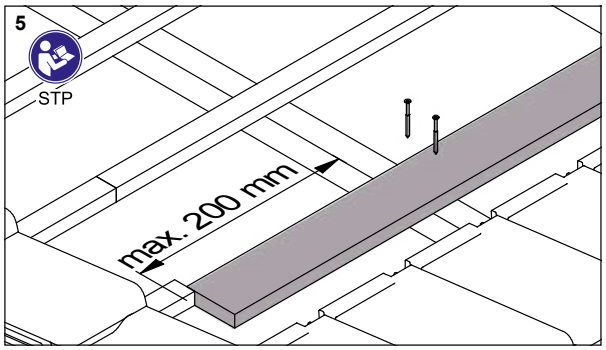

Fix Solrif battens with suitable wood screws in the vertical grid R_{ver}.

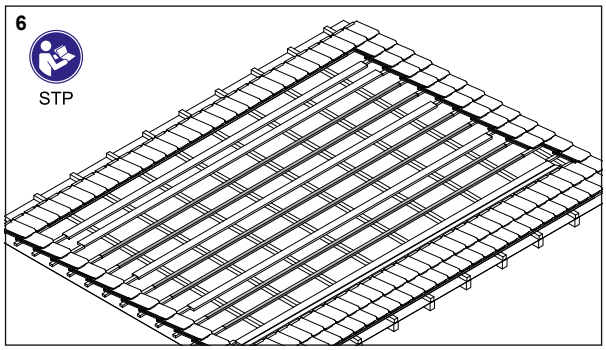

Additional supporting battens 30 × 50 mm for high snow loads if required.
Attention: Avoid collision with module junction box

© Ernst Schweizer AG

Ernst Schweizer AG
Bahnhofplatz 11
8908 Hedingen, Switzerland

Telephone +41 44 763 61 11
solar@ernstschweizer.com
www.ernstschweizer.com

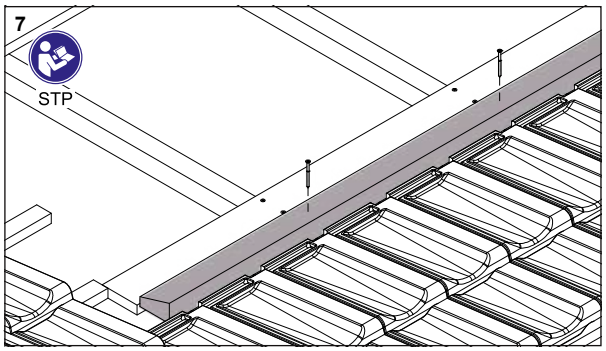

Place wedge plank.

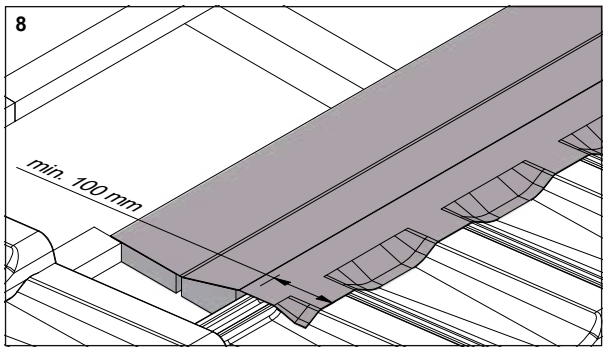

Lay and install the eaves skirting. If the eaves skirting is composed of several sections of flashing tape, the sections must overlap by at least 100 mm.

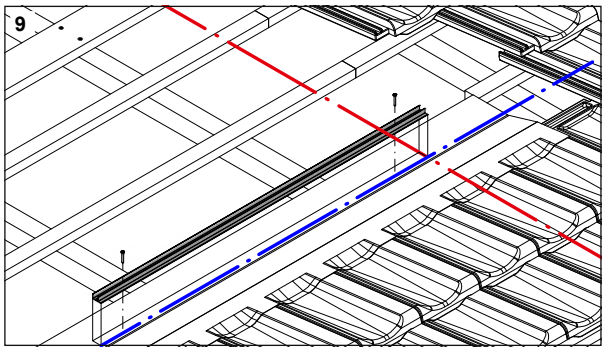

Position the eave profile

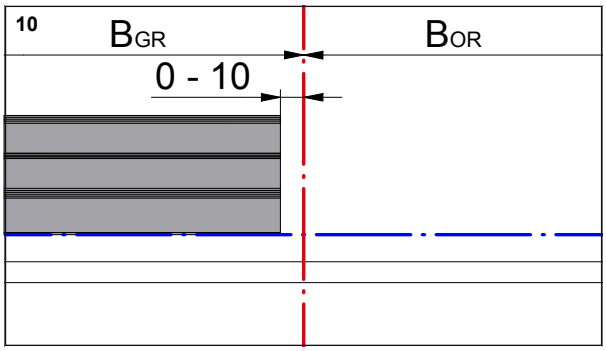

Align the eave profile with the reference (blue) and B_{OR}.

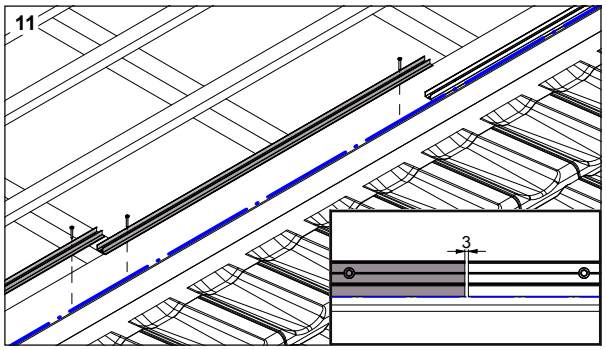

Overview of eave profile installation

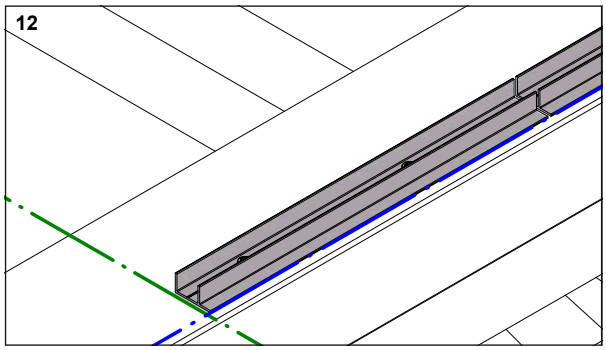

Shorten the last eave profile relative to B_{GR}. Drill a second hole if necessary.

© Ernst Schweizer AG

Ernst Schweizer AG
Bahnhofplatz 11
8908 Hedingen, Switzerland

Telephone +41 44 763 61 11
solar@ernstschweizer.com
www.ernstschweizer.com

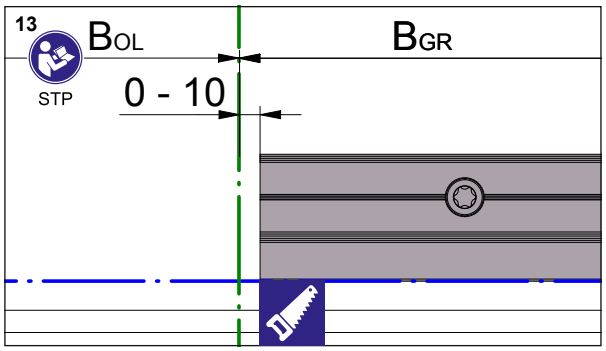

Shorten the last eave profile relative to B_{GR}. Drill a second hole if necessary.

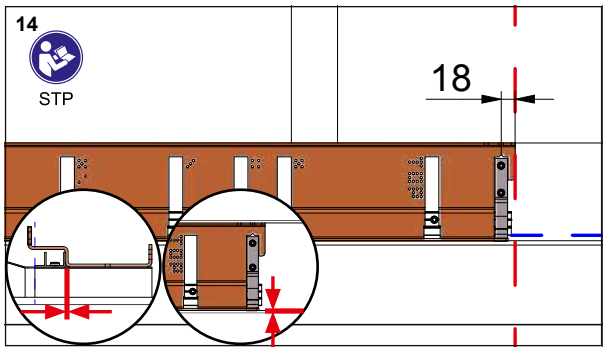

Fasten the mounting gauge to the eaves profile, place the mounting clamp profile with the help of the mounting gauge.

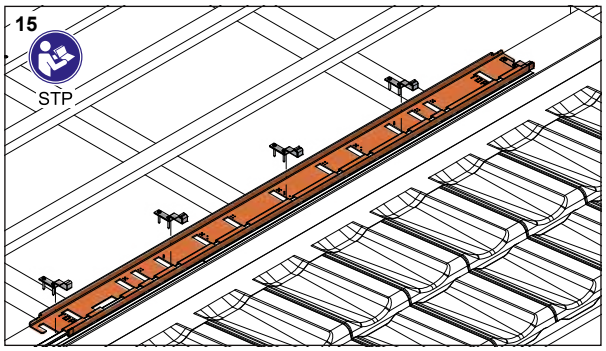

Screw on further profile mounting brackets and glass mounting clamps (number as per SPT report).

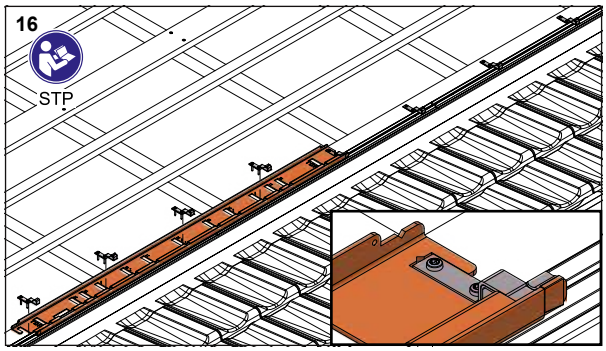

Attach further mounting clamps for the following modules.

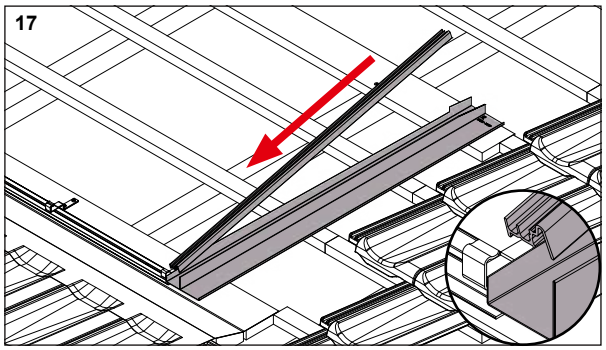

Insert right side flashing with flashing profile into bracket.

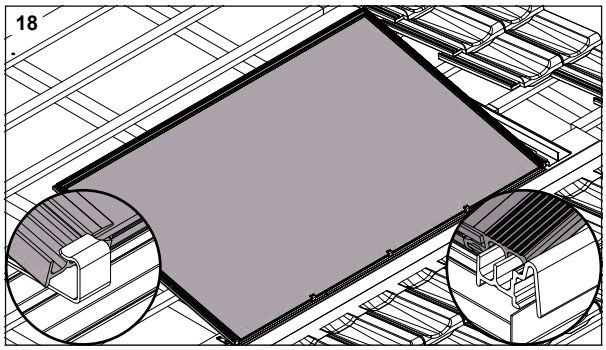

First place the module with the left frame profile in the mounting bracket, then lay it down.

© Ernst Schweizer AG

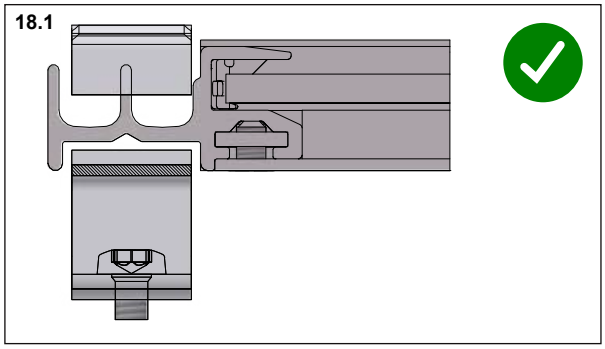

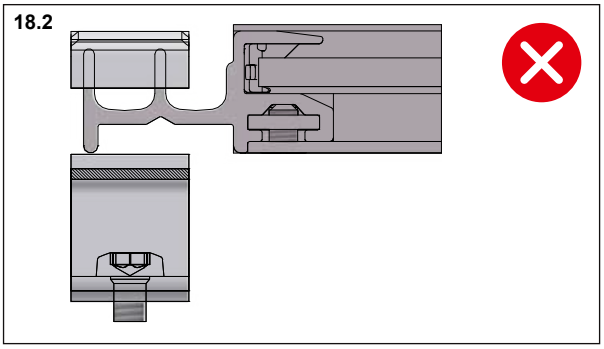

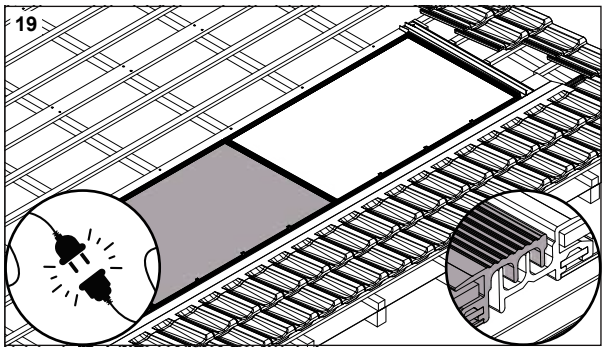

Lay further modules and connect electrically.

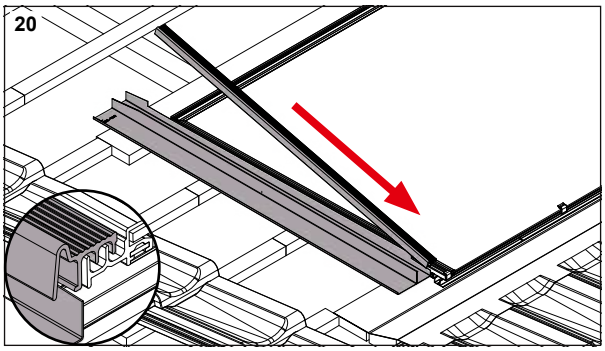

Close off at the left edge with side flashing and flashing profile.

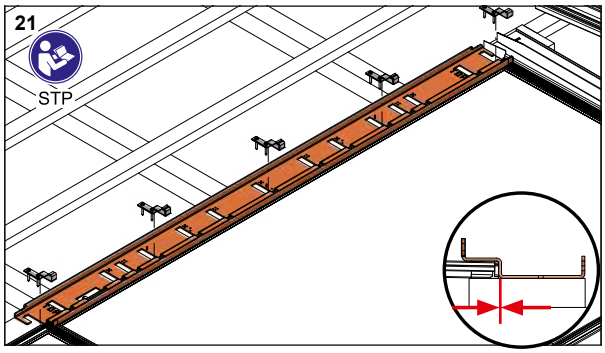

Mount the next row of mounting clamps.
If you are working without a mounting gauge, leave **15 mm** distance between mounting clamp and module.

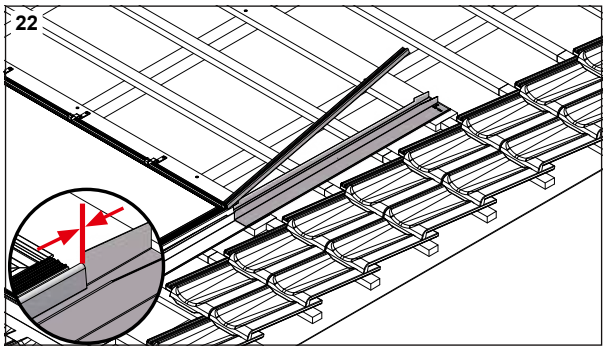

Insert the side flashing and flashing profile in the profile bracket as far as they will go.

© Ernst Schweizer AG

Ernst Schweizer AG
Bahnhofplatz 11
8908 Hedingen, Switzerland

Telephone +41 44 763 61 11
solar@ernstschweizer.com
www.ernstschweizer.com

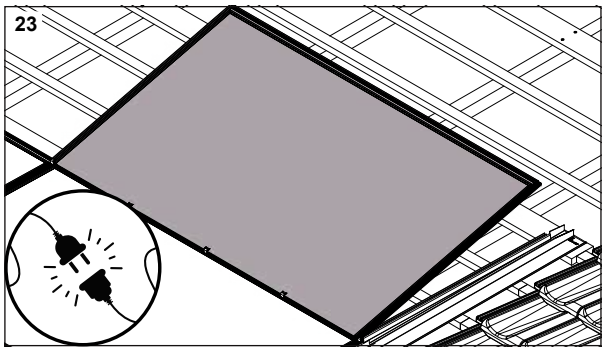

Lay further modules and connect electrically.

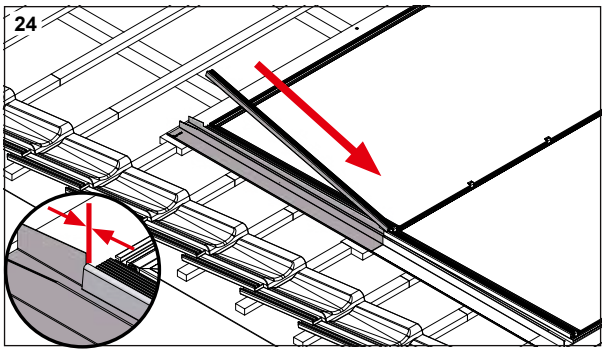

Close off on the left with side flashing and flashing profile.

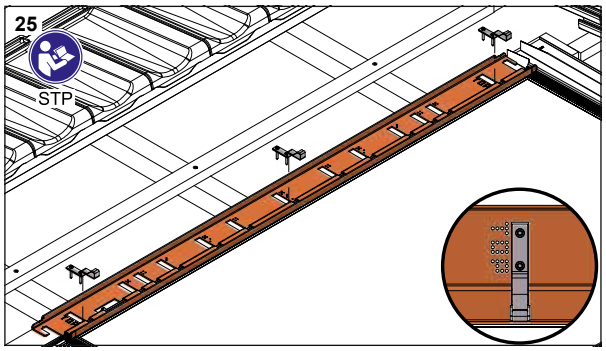

Lay top profile clamps row (‘top row’ position).

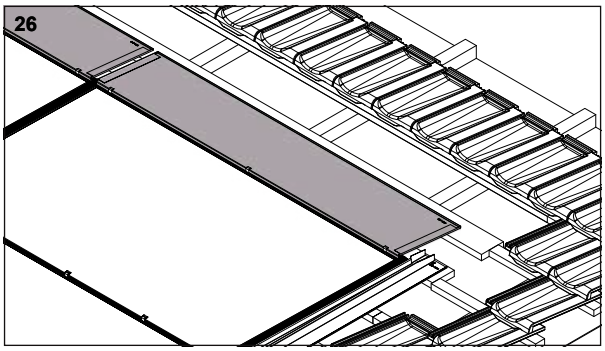

Insert top flashing.

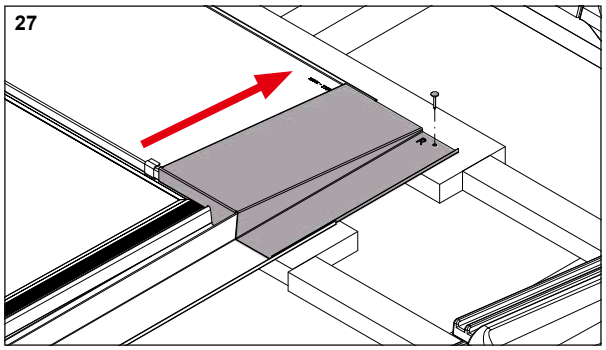

Insert the corner flashing right on the right and fix it with a wide-headed pin.

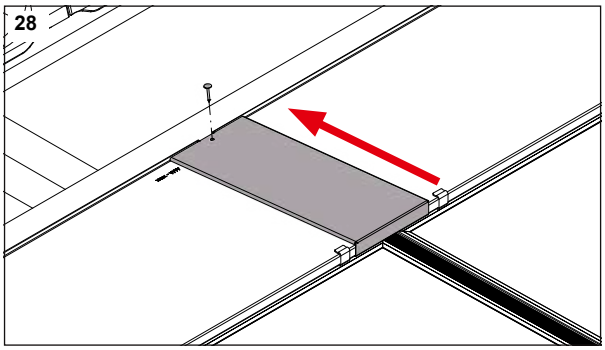

Push in the top flashing joiner and fix them with a wide-headed pin.

© Ernst Schweizer AG

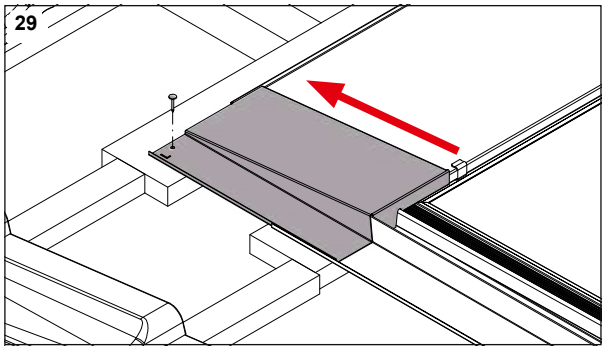

Push in the corner flashing left on the left and fix it with a wide-headed pin.

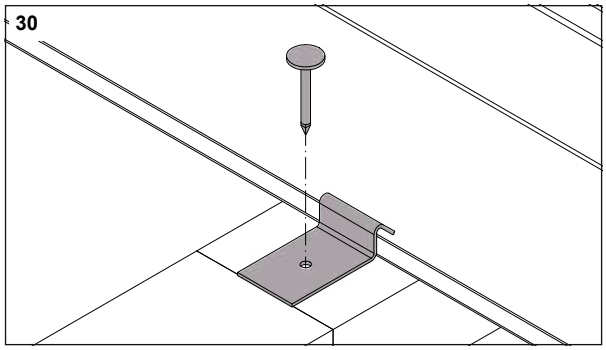

Attach sheet metal clamps and fix them with a wide-headed pin.

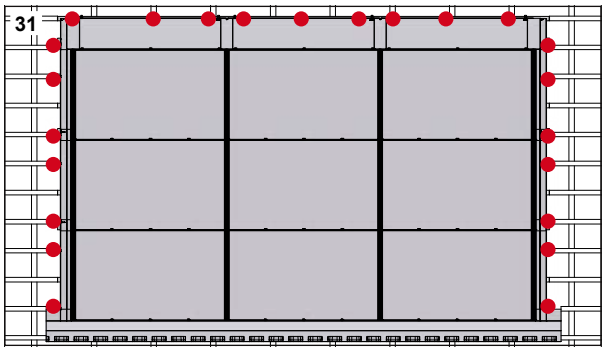

Flashing fixing positions:
2 per side flashing;
3 per top flashing;
1 per corner flashing.

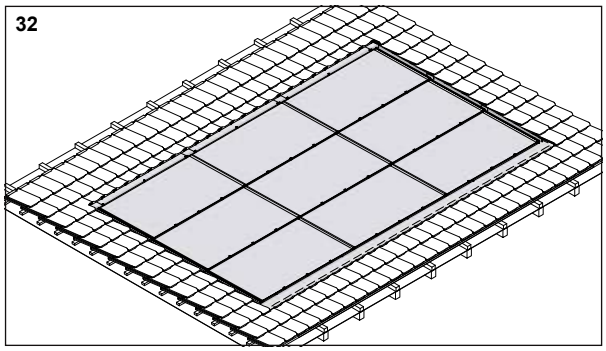

Replace tiles on roof, where necessary adjust and fix the tiles in a professional manner.

© Ernst Schweizer AG

Ernst Schweizer AG
Bahnhofplatz 11
8908 Hedingen, Switzerland

Telephone +41 44 763 61 11
solar@ernstschweizer.com
www.ernstschweizer.com

Maintenance and cleaning

Unless otherwise specified by the module manufacturer, it is recommended to check the PV array for damage annually and after severe weather events such as storms or hailstorms. In case of heavy soiling, it is recommended to clean the modules and module drainage channels. If the yield changes, the electrical installation must be checked by a specialist.

Replacing modules

1. Move the module to the left of the defective module upwards, e.g. with the aid of glass suction cups, until it comes free from the mounting brackets at the lower edge (when replacing modules at the left edge of the generator field, the edge profile must be pushed upwards).
2. Lift up the right-hand corner of the module to the left of the defective module by about 3 to 5 cm and secure the module in this position using a wooden wedge.
3. Shift the defective module upwards until it detaches from the mounting clamps on the bottom edge.
4. Lift up the defective module by the bottom edge and pull it downward and out.
5. Disconnect the connections to the neighbouring modules in the cable group and secure the loose cable ends of the neighbouring modules so that these do not ‘disappear’ between the PV array and the roof underlay.
6. Disconnect the equipotential bonding cable.
7. Remove the defective module.
8. Thread the replacement module under the lifted module or edge profile to the left of it until the equipotential bonding cable can be placed in the earthing terminal, and clamp it in place again.
9. Establish connections to the neighbouring modules in the cable group.
10. Now push the replacement module further under the module above it (at the upper edge of the generator field: under the connection plate) until the stop point is reached and lay it down.
11. Pull the replacement module downwards until it clicks into place into the bottom mounting clamps.
12. Remove the wooden wedge under the right-hand bottom corner of the module to the left of the replacement module.
13. Pull the module or the edge profile to left of the replacement module downwards until it clicks into place in the lowermounting clamps.

Disinstallation and disposal

Disinstallation and disposal of PV systems may only be carried out by qualified specialist firms. Have dismantling and disposal carried out only by a specialist company for roof-integrated photovoltaic systems.

© Ernst Schweizer AG

Ernst Schweizer AG
Bahnhofplatz 11
8908 Hedingen, Switzerland

Telephone +41 44 763 61 11
solar@ernstschweizer.com
www.ernstschweizer.com